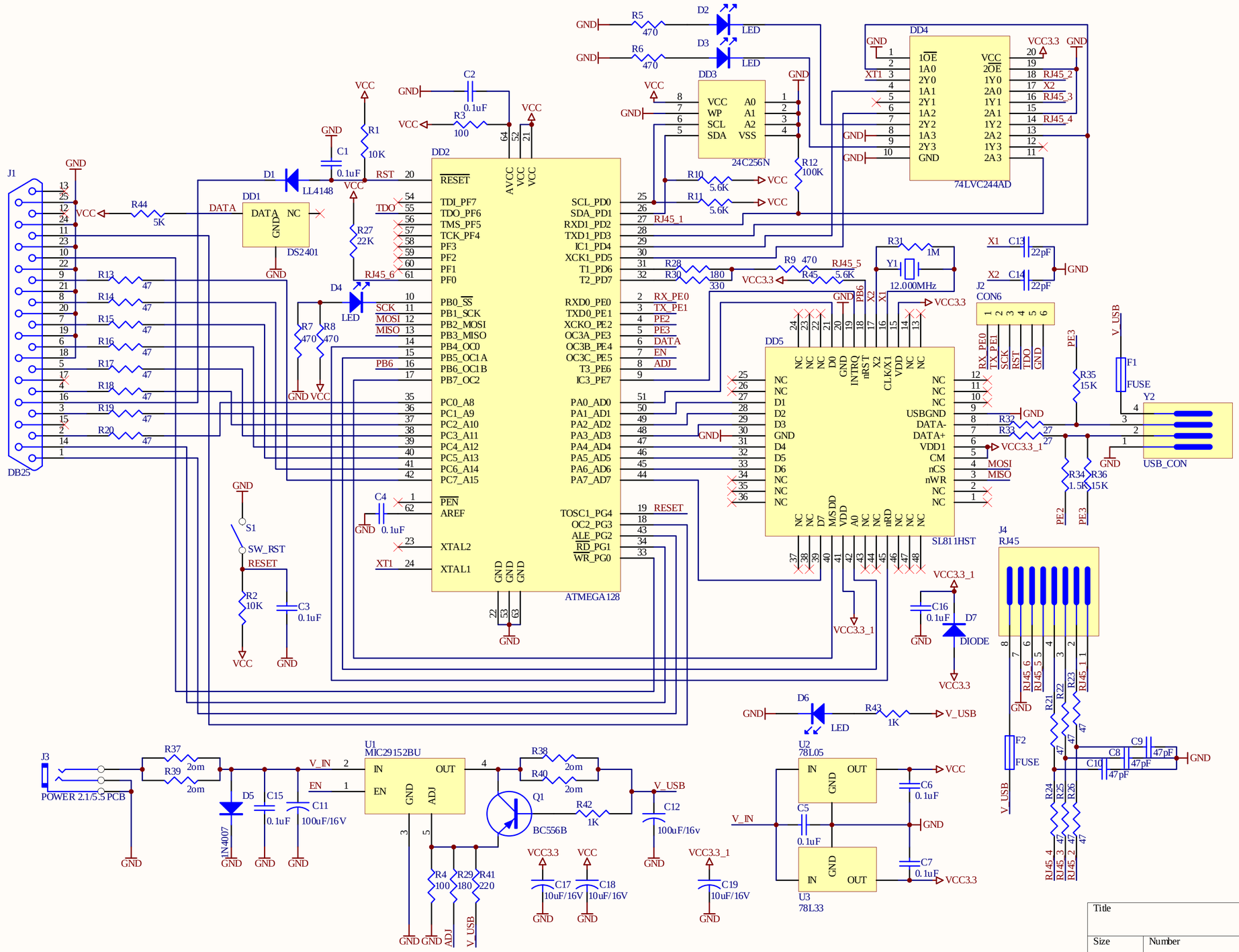

Title		
Size B	Number	Revision
Date: 09.11.2005		Sheet of
File: E:\Program Files\..\Smart_Clip.Sch		Drawn By: