V300/V500/V600: Baseband Block Diagram

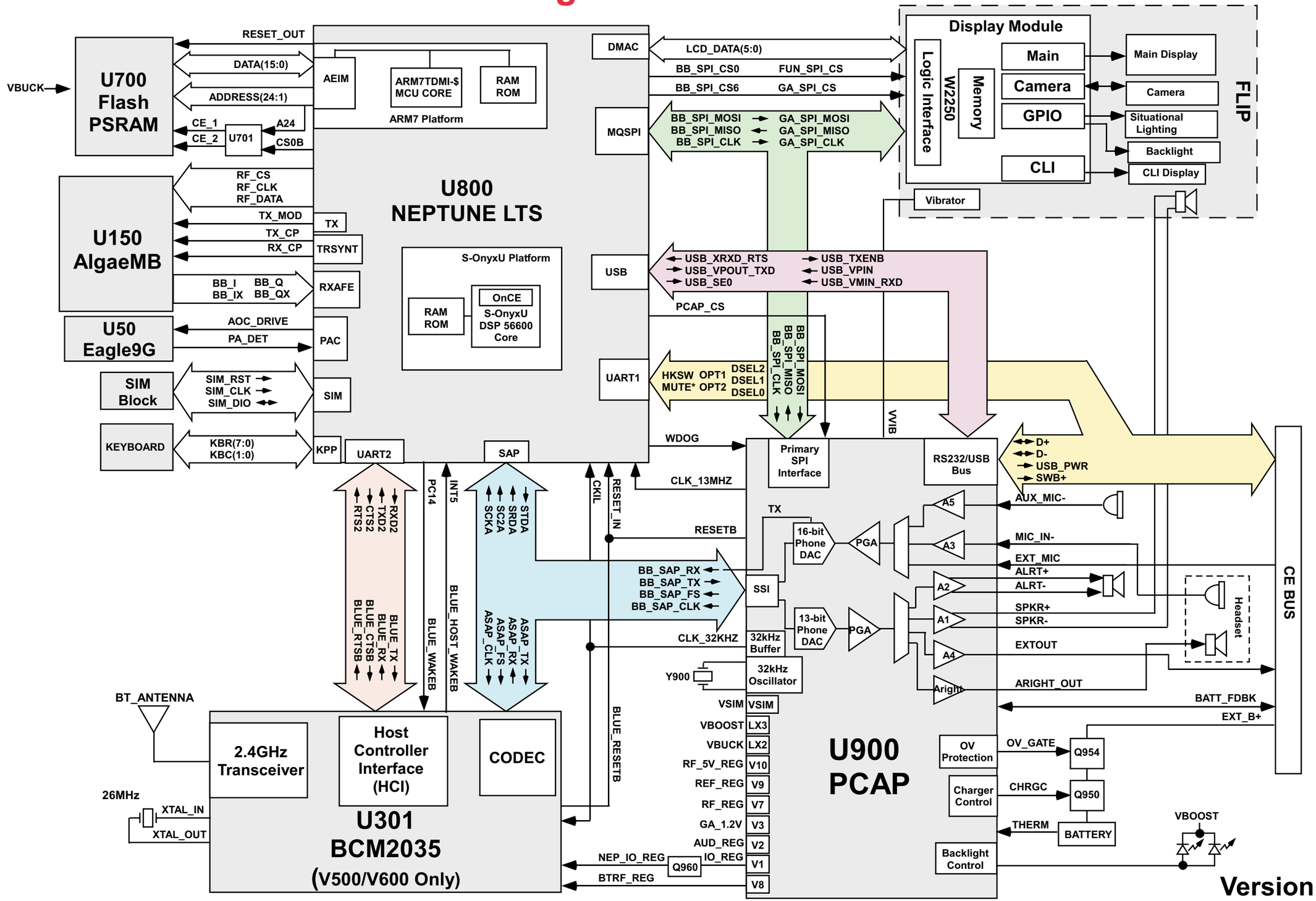

Version 1.0