GSM Service Support
Level 3 Authorized

AL SCHEMATIC - PAGE 1/2

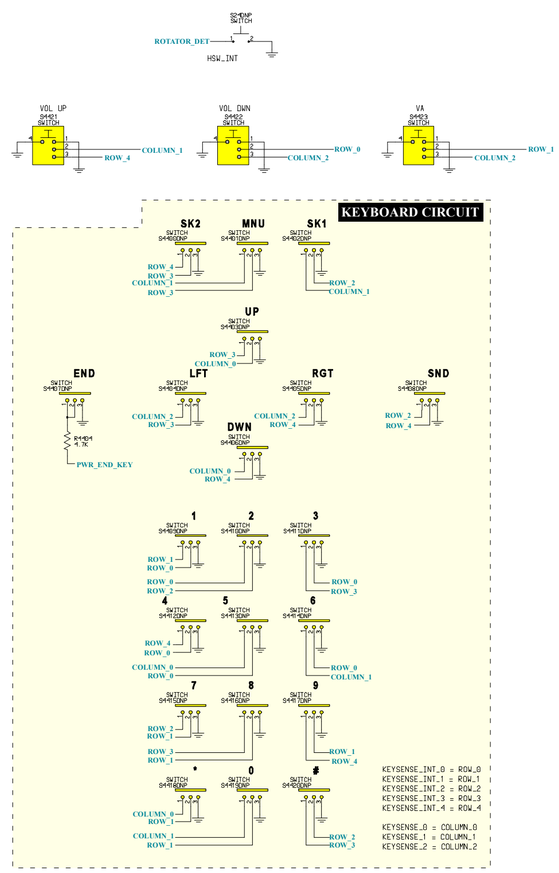

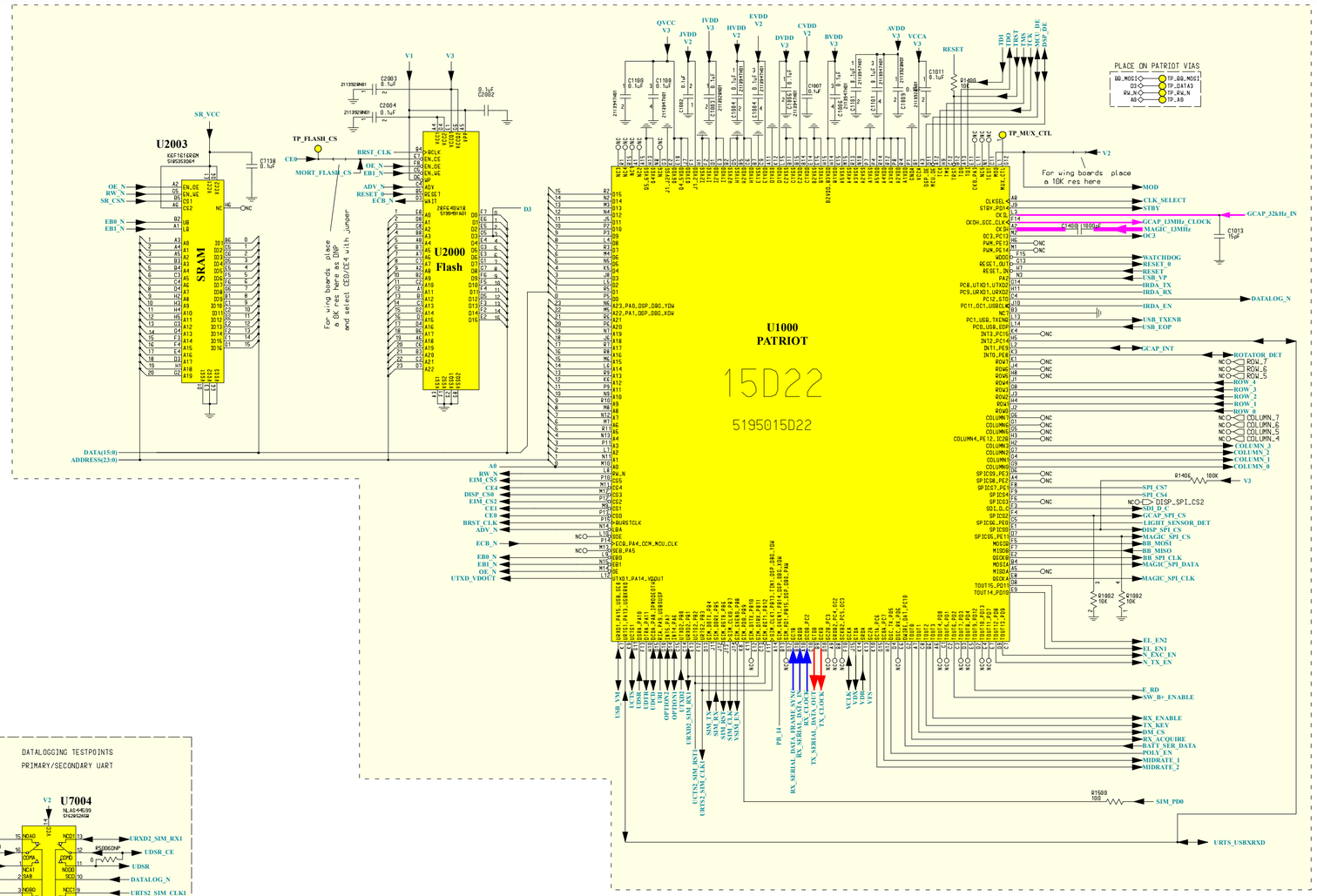

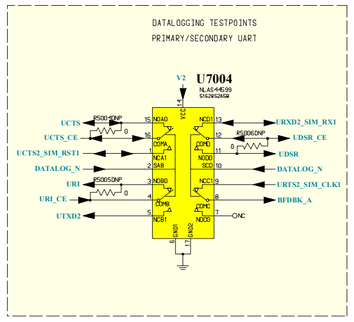

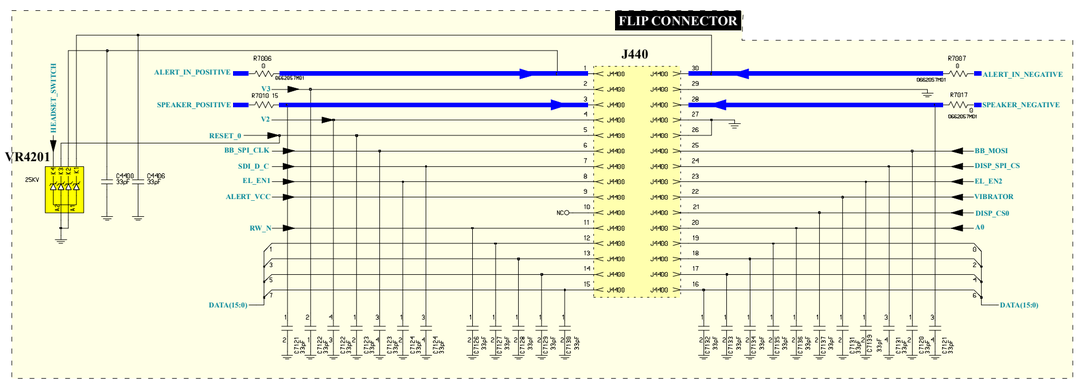

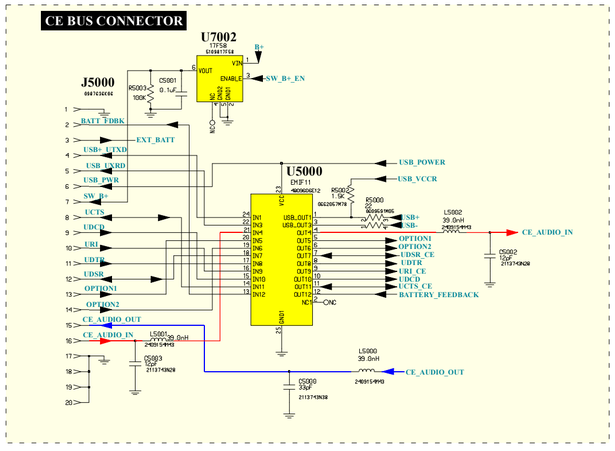

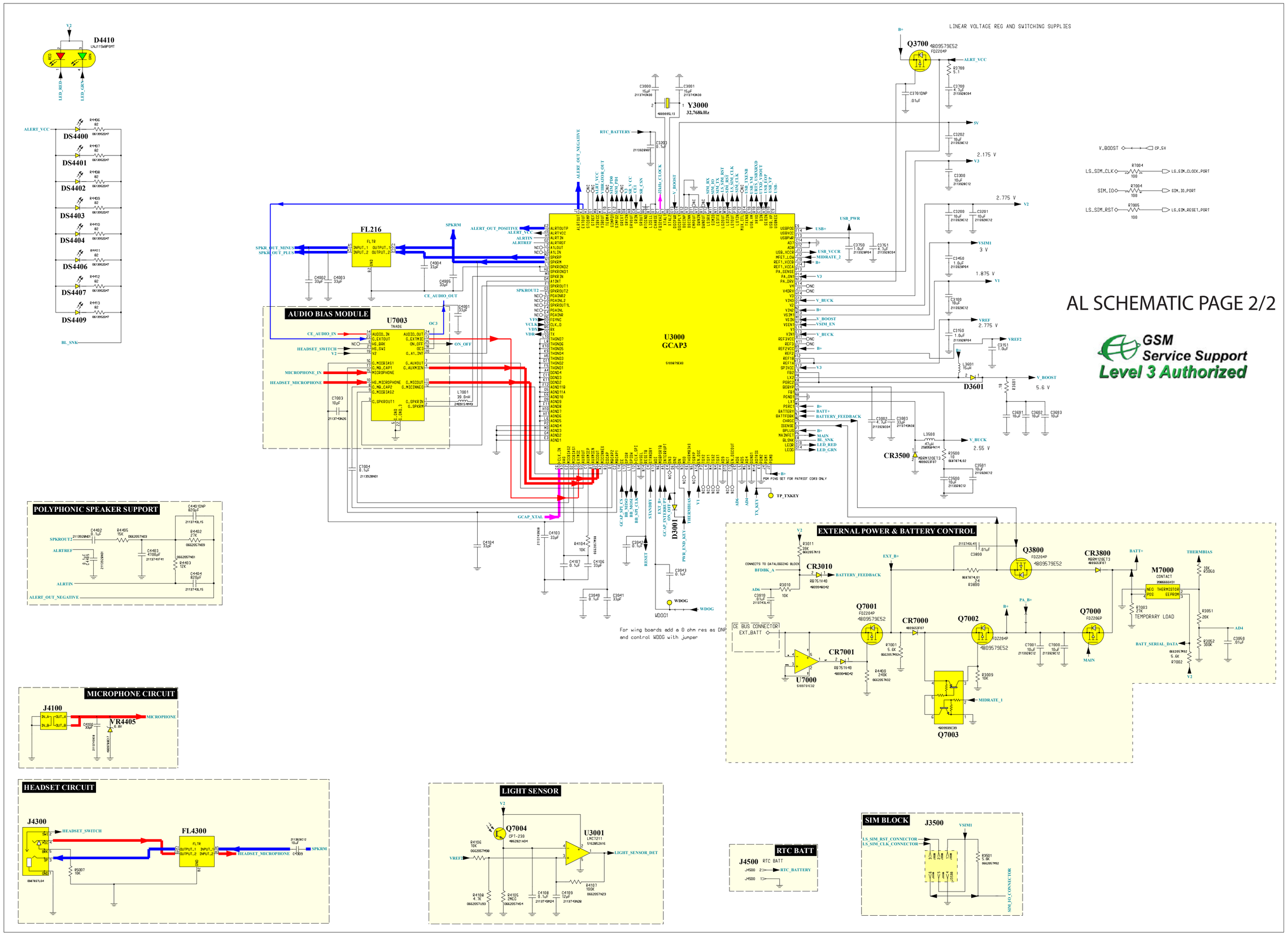
LINEAR VOLTAGE REG AND SWITCHING SUPPLIES
AUDIO BIAS MODULE
POLYPHONIC SPEAKER SUPPORT
MICROPHONE CIRCUIT
HEADSET CIRCUIT
LIGHT SENSOR
EXTERNAL POWER & BATTERY CONTROL
RTC BATT
SIM BLOCK
U3000
GCAP3
U7003
FL216
FL4300
Q3700
Y3000
32,768kHz
D3601
CR3500
Q7003
M7000
TEMPORARY LOAD
For wing boards add a 0 ohm res as DNP
and control WDOG with jumper
AL SCHEMATIC PAGE 2/2
GSM
Service Support
Level 3 Authorized