Somerset - Daughter PCB - 84001376001 - Top

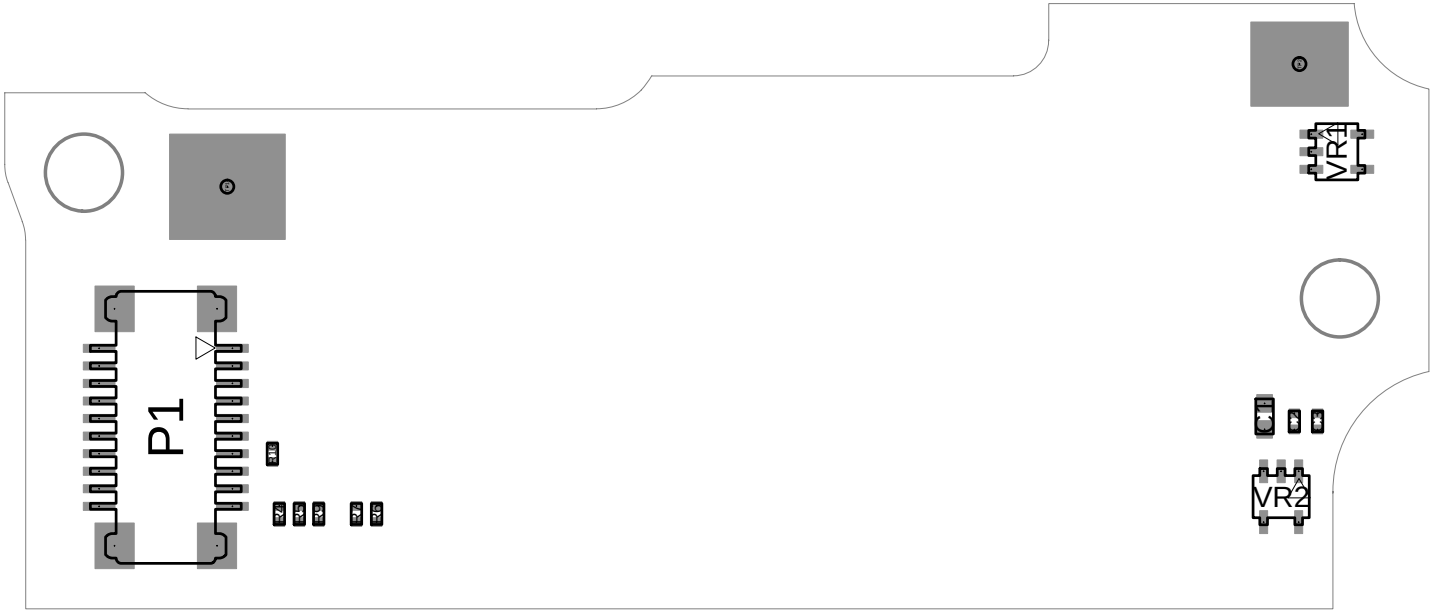

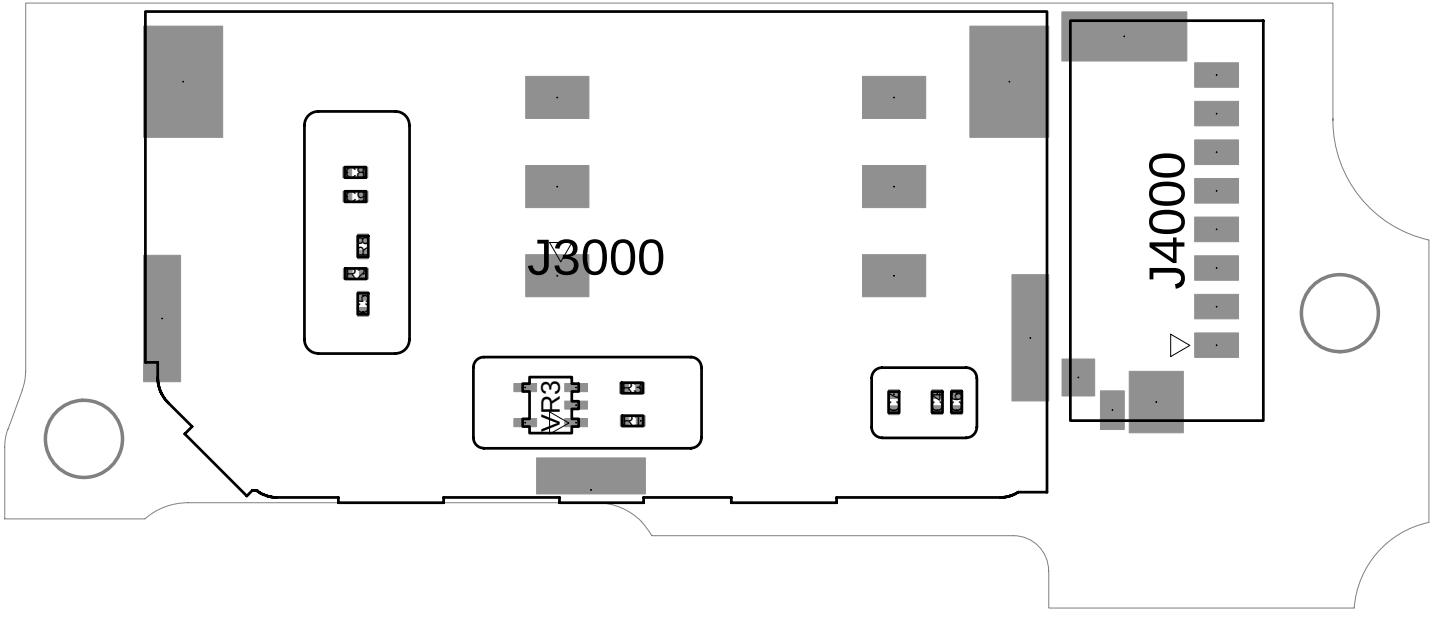

Somerset - Daughter PCB - 84001376001 - Bottom

Somerset - Daughter PCB - 84001376001_P1.2 - Schematic

REVISIONS				
ZONE	LTR	DESCRIPTION	DATE	APPROVED

USD

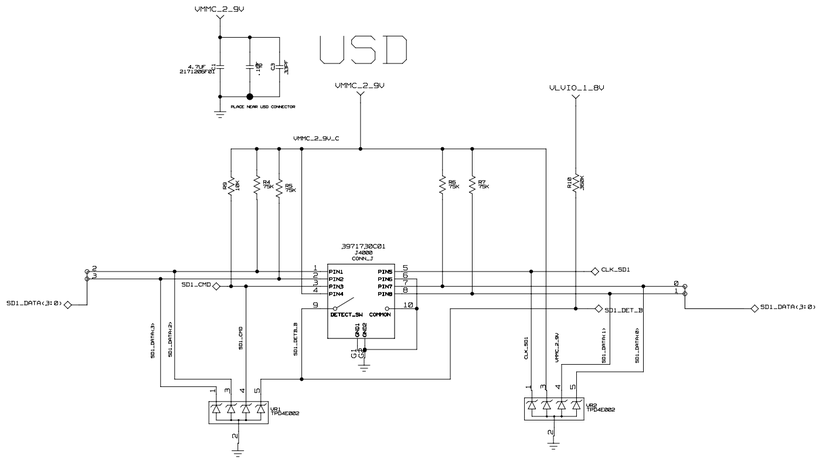

DAUGHTERBOARD CONNECTOR 288679M06

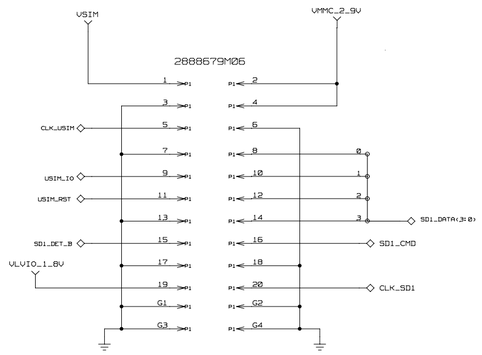

USIM

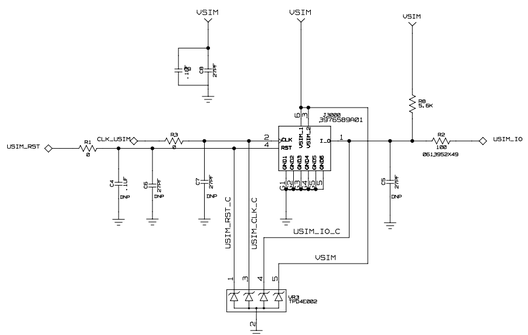

BUSHING

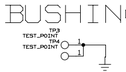

GROUND CLIP PADS

APPROVALS	MOTOROLA MOBILE DEVICES
ENGINEER: GARY QUARTANA	BLOCK TITLE: top
LAST MODIFIED BY: GARY QUARTANA Mon Sep 08 16:42:43 2008	
MOTOROLA CONFIDENTIAL RESTRICTED THE DRAWING ON THIS PRINT AND INFORMATION THEREWITH ARE PROPRIETARY TO MOTOROLA AND SHALL NOT BE USED OR DISCLOSED IN WHOLE OR IN PART WITHOUT MOTOROLA'S CONSENT. © COPYRIGHT, MOTOROLA. THIS DOES NOT IMPLY PUBLICATION.	D PROJECT NAME 84001376001.cpm REV P1.2
	CAD FILE NAME: 8471150F01_P0.brd PAGE 1 OF 1