Somerset – Main PCB – 84001375001_P1.2 - Top

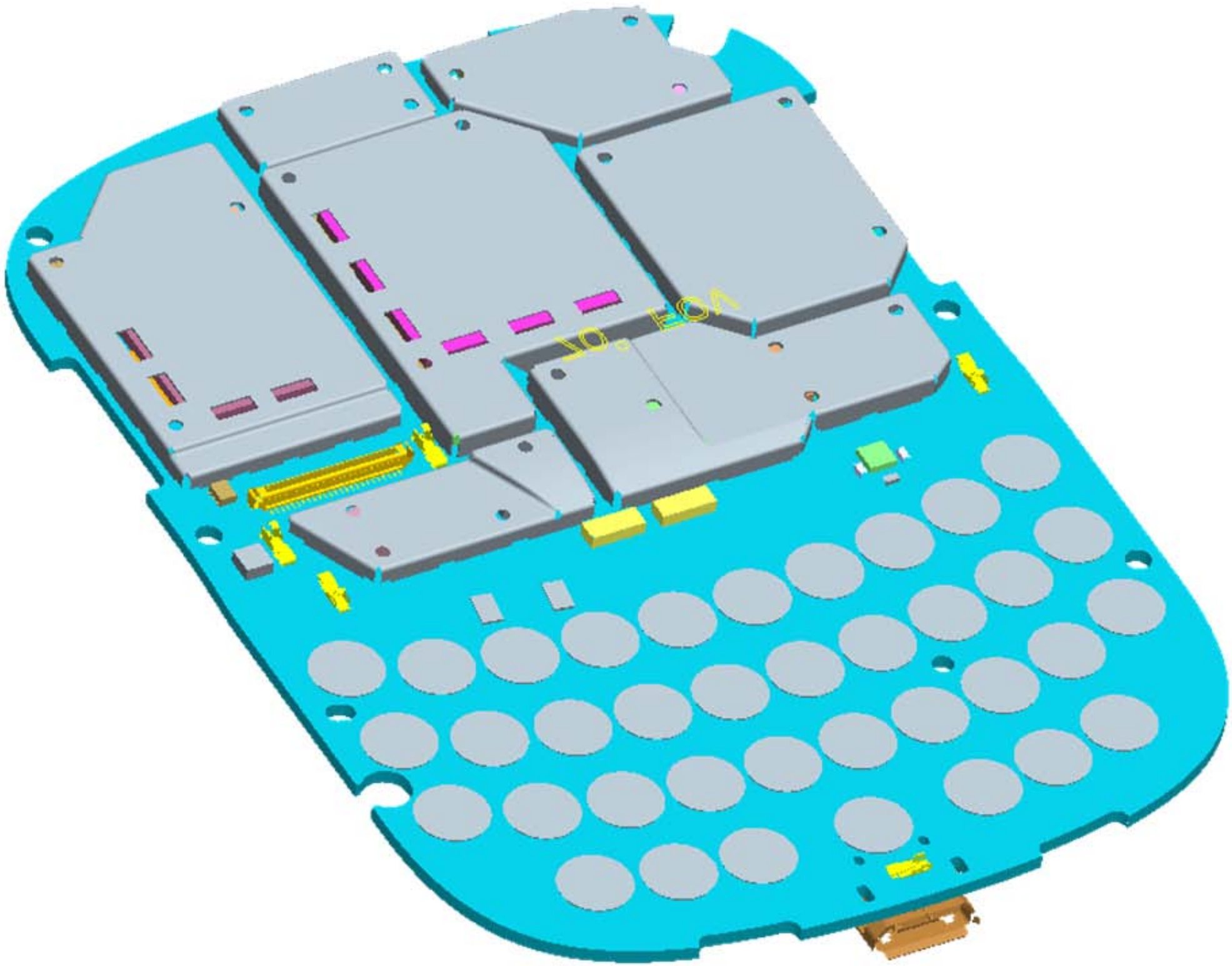

Somerset - Main PCB - 84001375001_P1.2 - Top

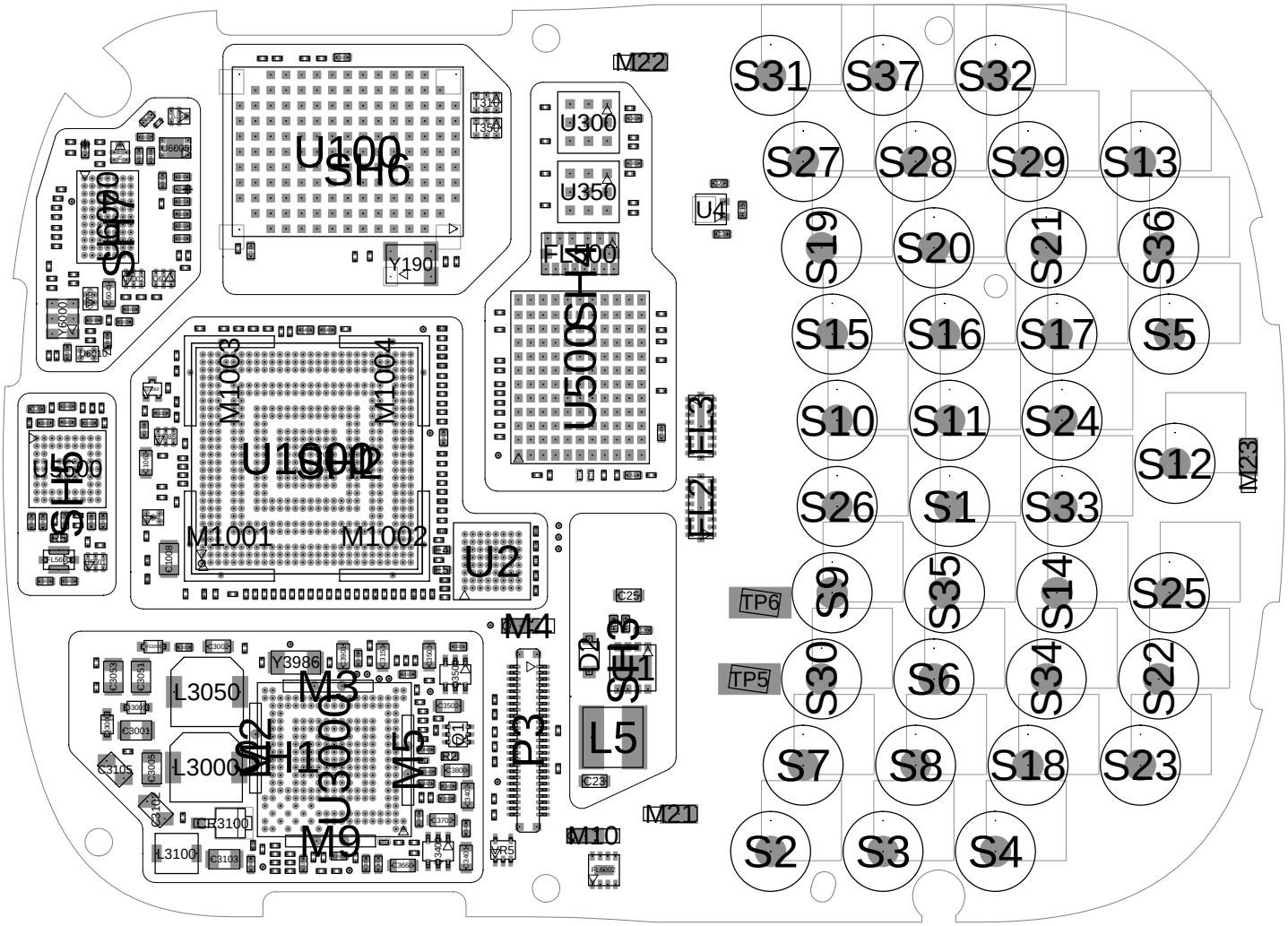

Somerset – Main PCB – 84001375001_P1.2 - Bottom

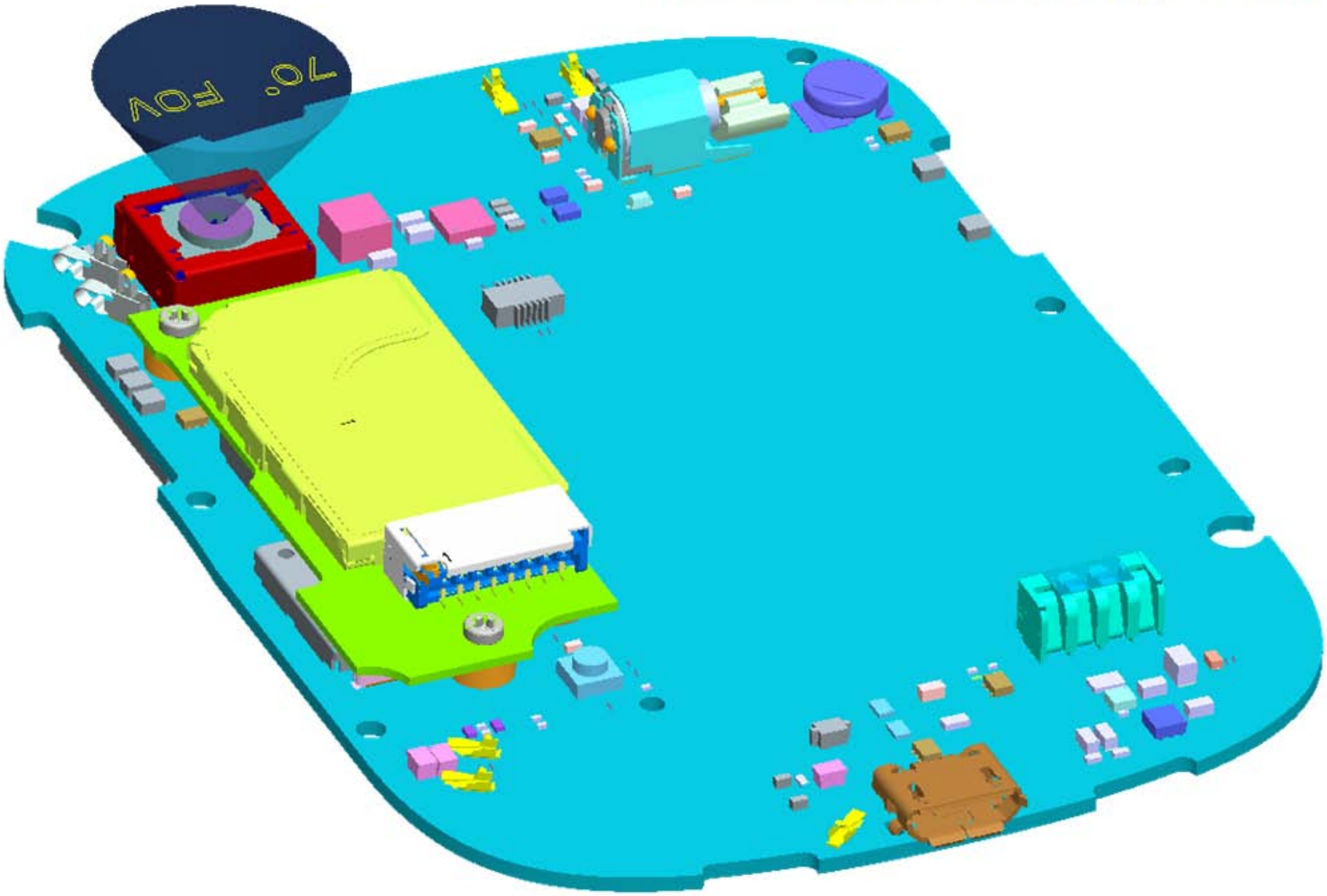

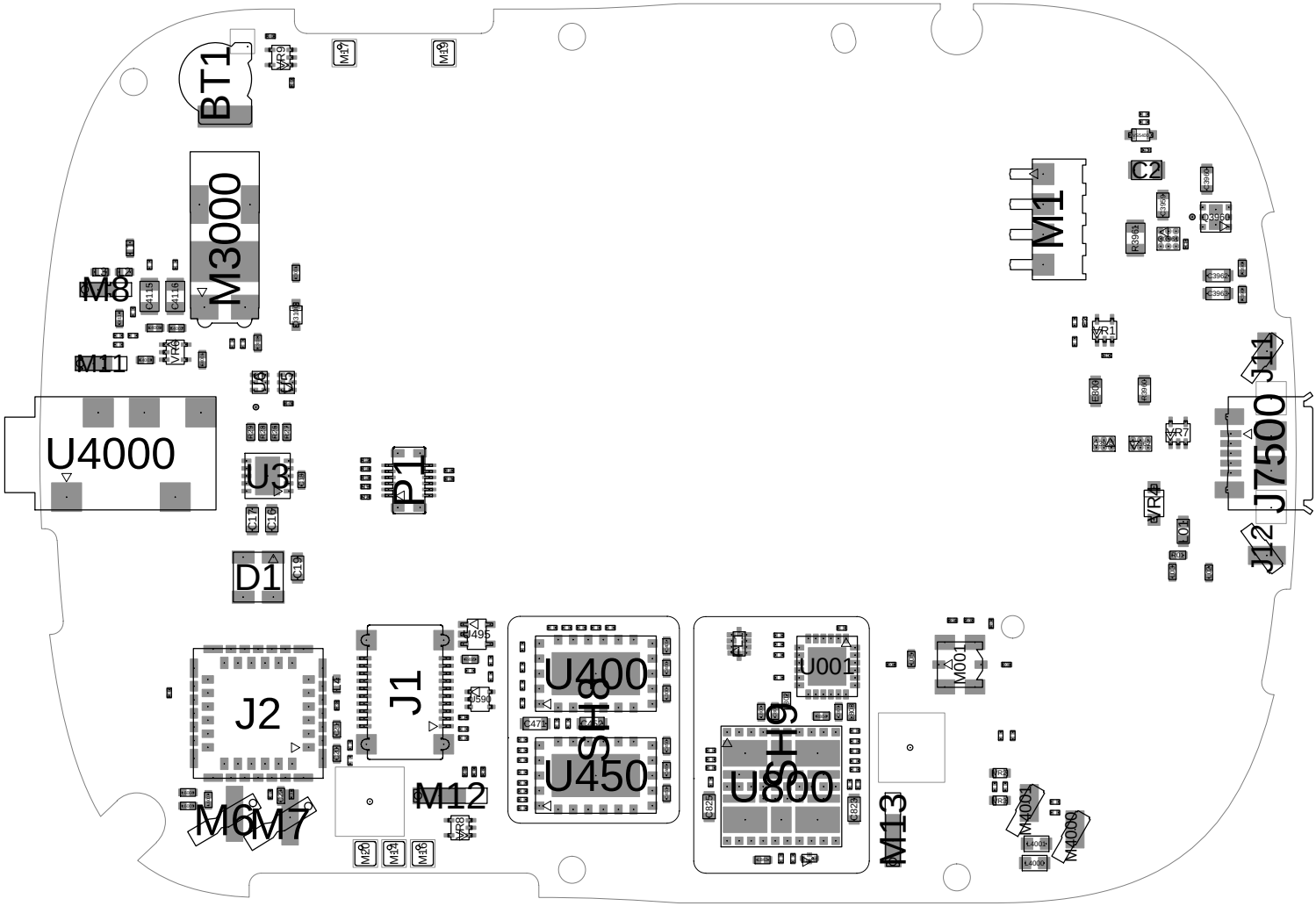

Somerset - Main PCB - 84001375001_P1.2 - Bottom

REVISIONS				
ZONE	LTR	DESCRIPTION	DATE	APPROVED

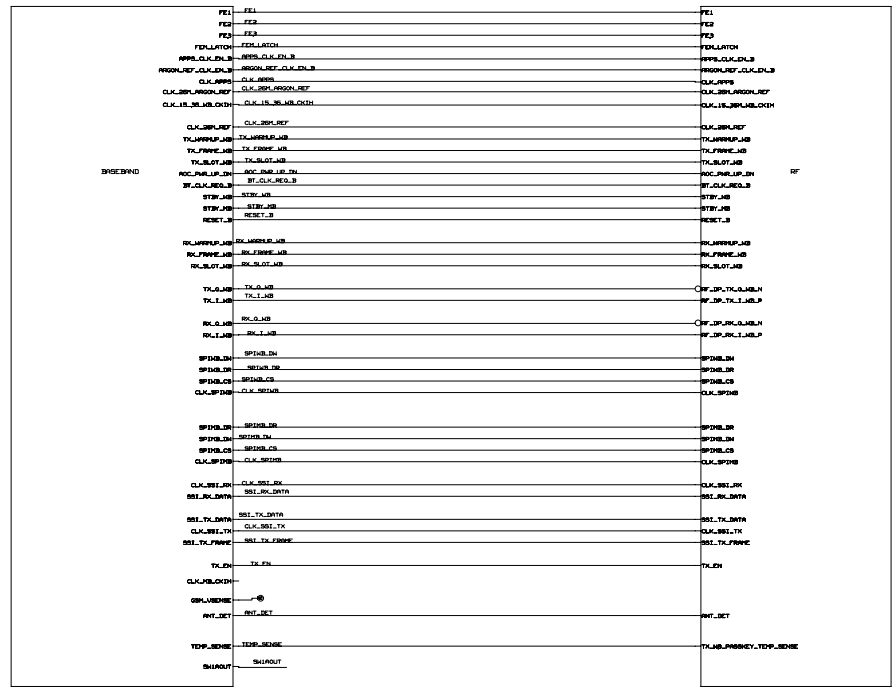

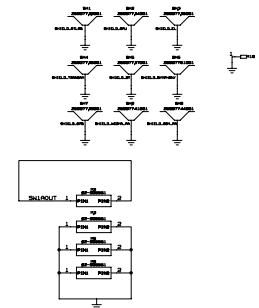

Somerset - Main PCB - 84001375001_P1.2 - Schematics

APPROVALS	MOTOROLA MOBILE DEVICES	
ENGINEER: SIAMAK VARNAMKHASTI	BLOCK TITLE: top	
LAST MODIFIED BY: SIAMAK VARNAMKHASTI Mon Sep 08 10:08:45 2008		
MOTOROLA CONFIDENTIAL RESTRICTED	D	PROJECT NAME 8471150F01.cpm	REV P1.2
		CAD FILE NAME: 8471150F01_P0.brd	PAGE 1 OF 17

THE DRAWING ON THIS PRINT AND INFORMATION THEREWITH ARE PROPRIETARY TO MOTOROLA AND SHALL NOT BE USED OR DISCLOSED IN WHOLE OR IN PART WITHOUT MOTOROLA'S CONSENT. © COPYRIGHT, MOTOROLA, THIS DOCS NOT IMPLY PUBLICATION

REVISIONS				
ZONE	LTR	DESCRIPTION	DATE	APPROVED

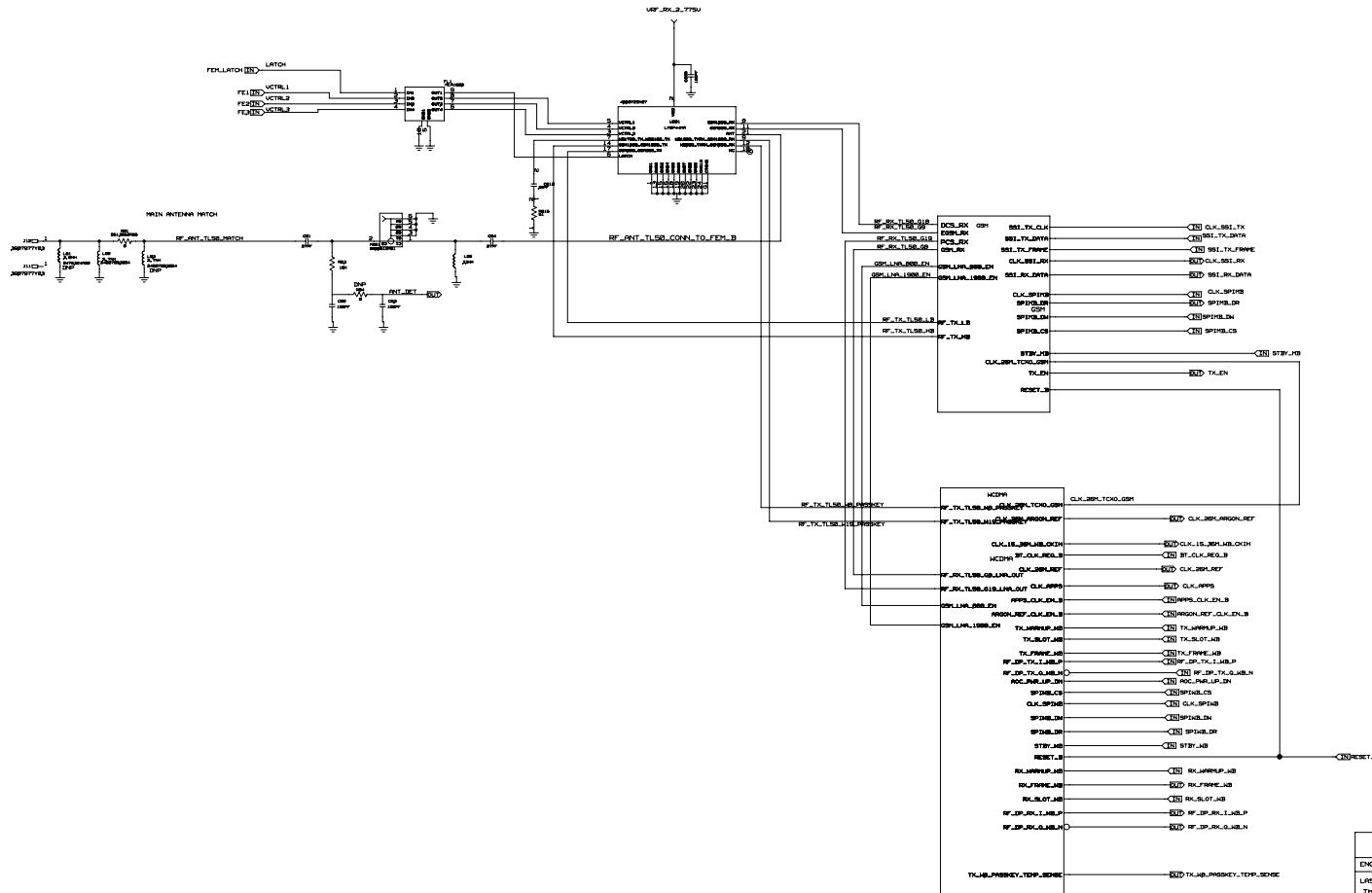

Somerset - Main PCB - 84001375001_P1.2 - Schematics

APPROVALS	MOTOROLA MOBILE DEVICES
ENGINEER: TIMOTHY ORTIZ	BLOCK TITLE: rf
LAST MODIFIED BY: MARIANA RAIMONDO Thu Sep 04 10:36:58 2008	
MOTOROLA CONFIDENTIAL RESTRICTED	D PROJECT NAME 8471150F01.cpm — REV P1.2
	CAD FILE NAME: 8471150F01_P0.brd — PAGE 2 OF 17

THE DRAWING ON THIS FRONT AND INFORMATION THEREOUTS ARE PROPRIETARY TO MOTOROLA AND SHALL NOT BE USED OR DISCLOSED TO ANY OTHER PERSONS OR ORGANIZATIONS WITHOUT WRITTEN AUTHORITY. © COPYRIGHT, MOTOROLA. THIS DOCS NOT IMPLY PUBLICATION

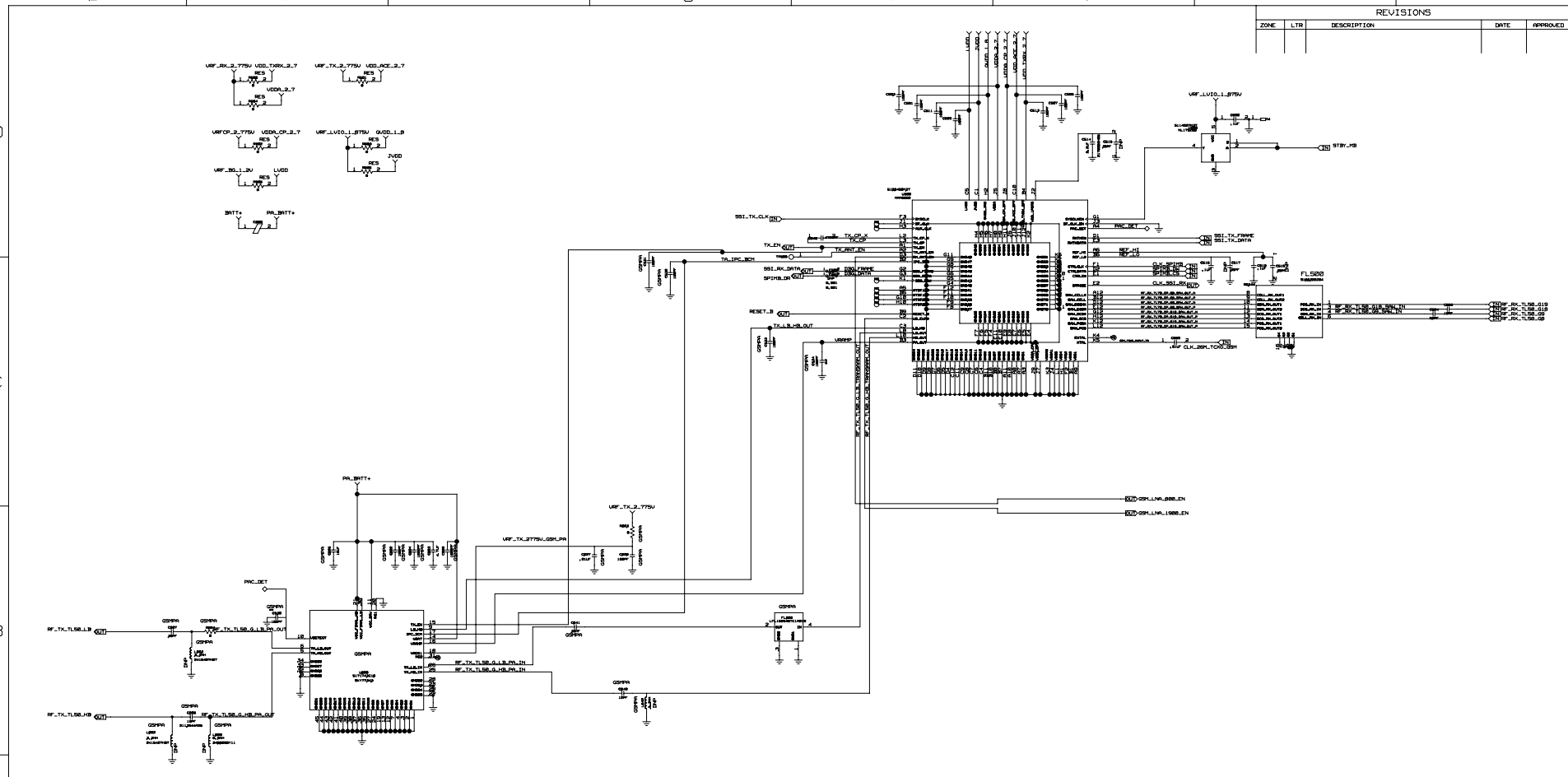

Somerset - Main PCB - 84001375001_P1.2 - Schematics

APPROVALS	MOTOROLA MOBILE DEVICES
ENGINEER: TIMOTHY ORTIZ	BLOCK TITLE: gsm
LAST MODIFIED BY: GARY QUARTANA Thu Sep 04 10:36:59 2008	
MOTOROLA CONFIDENTIAL RESTRICTED	D — PROJECT NAME: 8471150F01.cpm — REV: P1.2
	CAD FILE NAME: 8471150F01_P0.brd — PAGE 3 OF 17

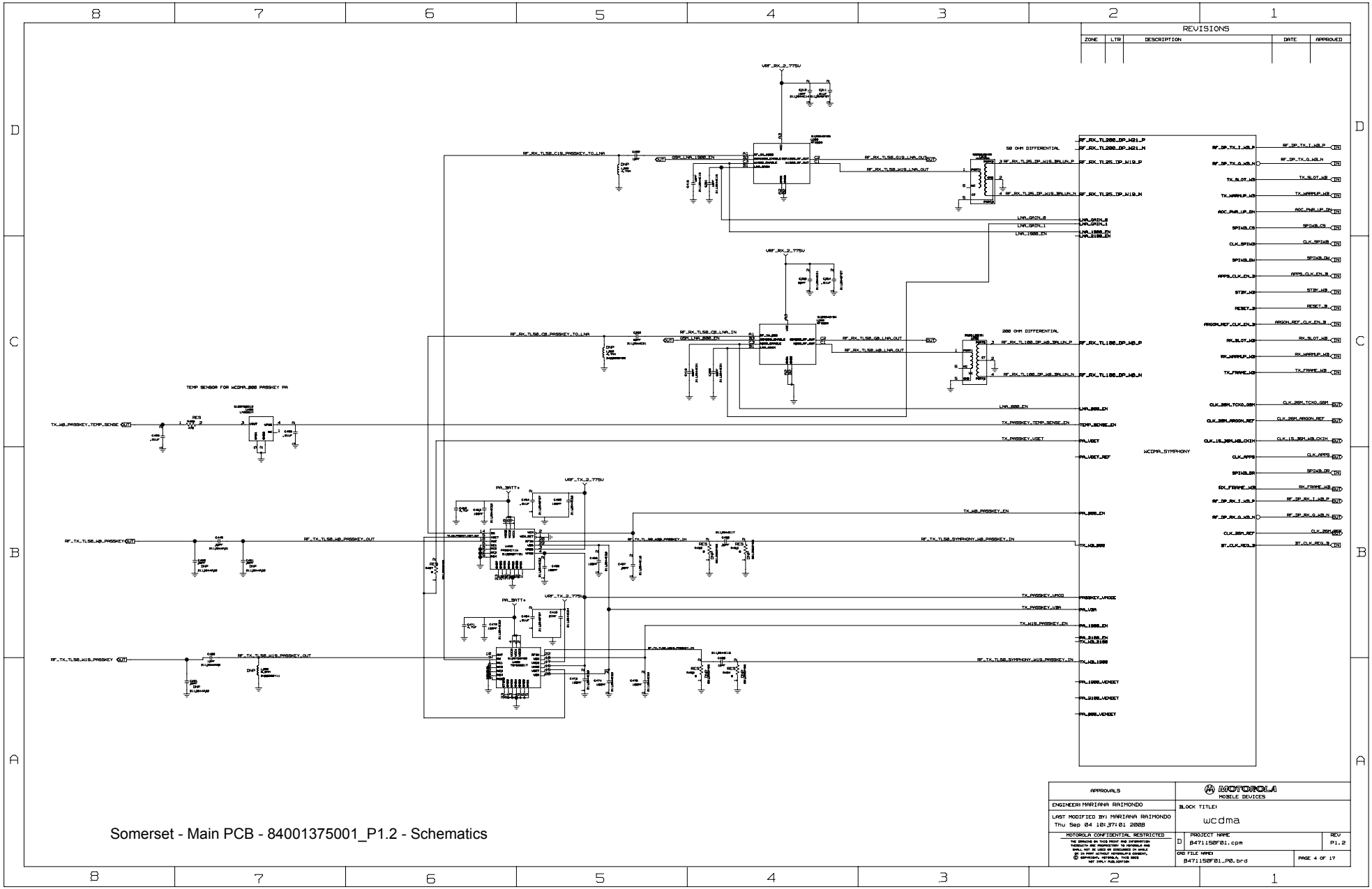

Somerset - Main PCB - 84001375001_P1.2 - Schematics

APPROVALS	MOTOROLA MOBILE DEVICES
ENGINEER: MARIANA RAIMONDO	BLOCK TITLE: wcdma
LAST MODIFIED BY: MARIANA RAIMONDO Thu Sep 04 10:37:01 2008	
MOTOROLA CONFIDENTIAL RESTRICTED	D — PROJECT NAME: 8471150F01.cpm — REV: P1.2
	CAD FILE NAME: 8471150F01_P0.brd — PAGE 4 OF 17

REVISIONS				
ZONE	LTR	DESCRIPTION	DATE	APPROVED

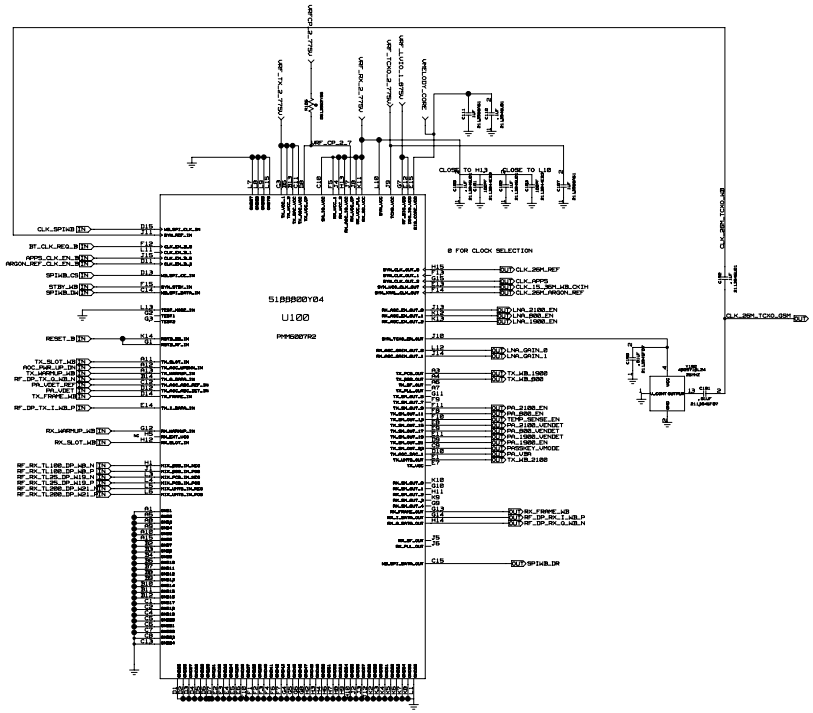

Somerset - Main PCB - 84001375001_P1.2 - Schematics

APPROVALS	MOTOROLA MOBILE DEVICES	
ENGINEER: MARIANA RAIMONDO	BLOCK TITLE: wcdma_symphony	
LAST MODIFIED BY: MARIANA RAIMONDO Thu Sep 04 10:37:02 2008		
MOTOROLA CONFIDENTIAL RESTRICTED	D	PROJECT NAME: 8471150F01.cpm — REV: P1.2
	CAD FILE NAME: 8471150F01_P0.brd	PAGE 5 OF 17

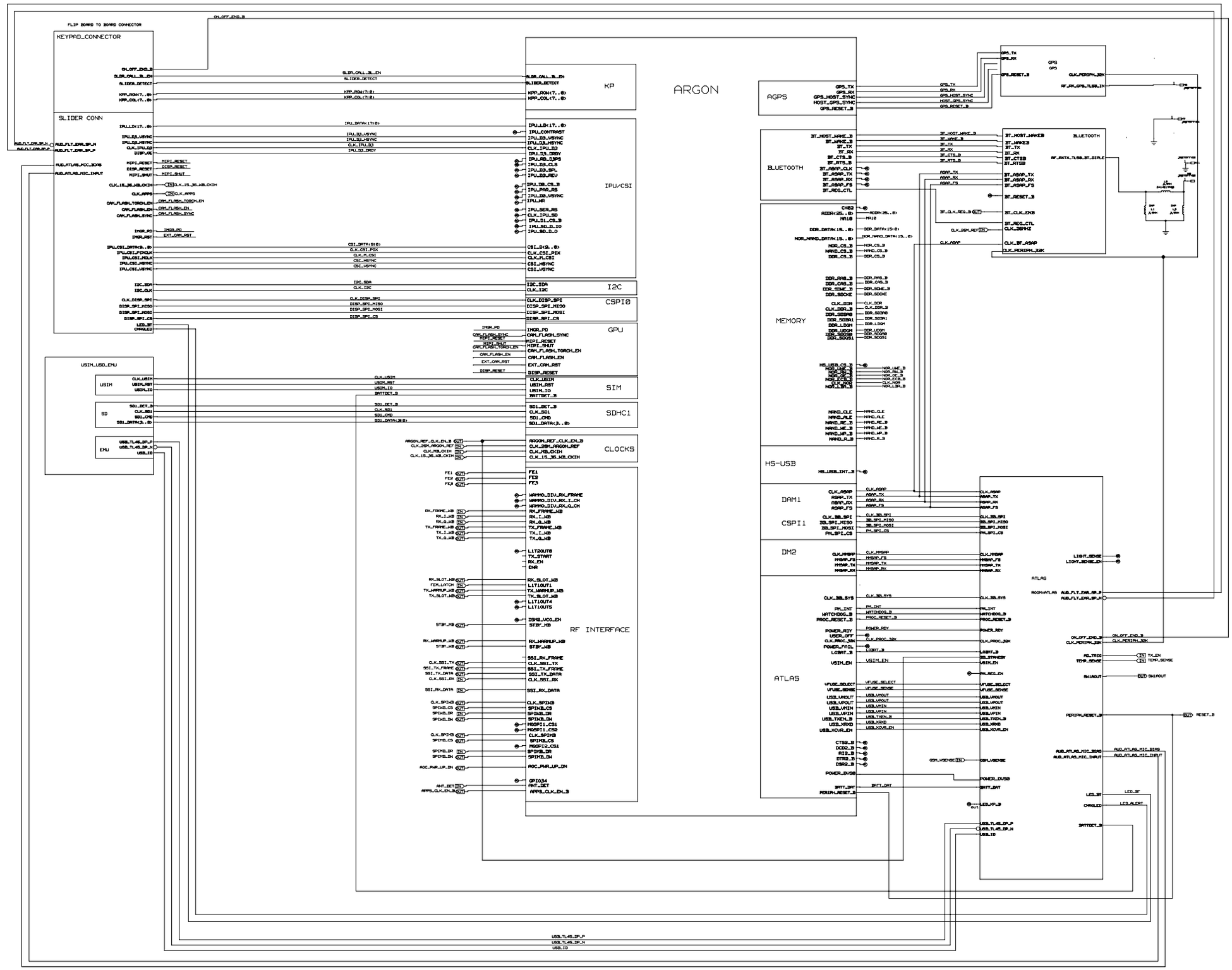

REVISIONS				
ZONE	LTR	DESCRIPTION	DATE	APPR.

APPROVALS	MOTOROLA MOBILE DEVICES
ENGINEER: E1124B	BLOCK TITLE: baseband
LAST MODIFIED BY: GARY QUARTANA Thu Sep 04 10:37:03 2008	
MOTOROLA CONFIDENTIAL RESTRICTED	E — PROJECT NAME: 8471150F01.cpm — REV: P1.2
THE DESIGN ON THIS PRINT AND INFORMATION THEREON AND MODIFICATIONS TO DESIGNS AND SHALL NOT BE USED OR DISCLOSED IN WHOLE OR IN PART WITHOUT MOTOROLA'S CONSENT. © COPYRIGHT, MOTOROLA, THIS DOCS NOT FULLY PUBLISHED	CAD FILE NAME: 8471150F01_P0.brd — PAGE 6 OF 17

Somerset - Main PCB - 84001375001_P1.2 - Schematics

MOTOROLA CONFIDENTIAL PROPRIETARY

REVISIONS				
ZONE	LTR	DESCRIPTION	DATE	APPROVED

EMU CONNECTOR

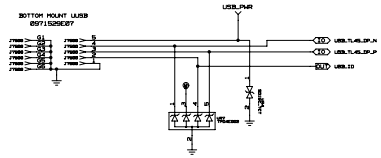

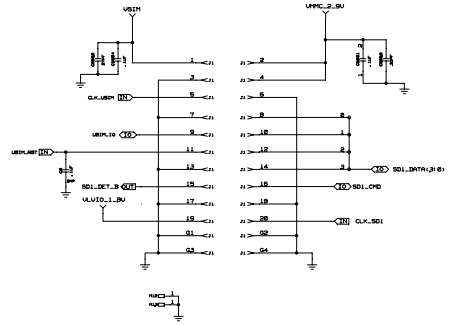

Somerset - Main PCB - 84001375001_P1.2 - Schematics

APPROVALS	MOTOROLA MOBILE DEVICES
ENGINEER: GARY QUARTANA	BLOCK TITLE: sim_emu_transflash
LAST MODIFIED BY: GARY QUARTANA Thu Sep 04 10:37:05 2008	
MOTOROLA CONFIDENTIAL RESTRICTED	D PROJECT NAME B471150F01.cpm REV P1.2
THE DRAWING ON THIS FRONT AND INFORMATION THEREIN ARE PROPRIETARY TO MOTOROLA AND SHALL NOT BE USED OR DISCLOSED IN WHOLE OR IN PART WITHOUT MOTOROLA'S CONSENT. © COPYRIGHT, MOTOROLA, THIS DOCS NOT SHALL PUBLICATION	CAD FILE NAME: B471150F01_P0.brd PAGE 7 OF 17

REVISIONS				
ZONE	LTR	DESCRIPTION	DATE	APPROVED

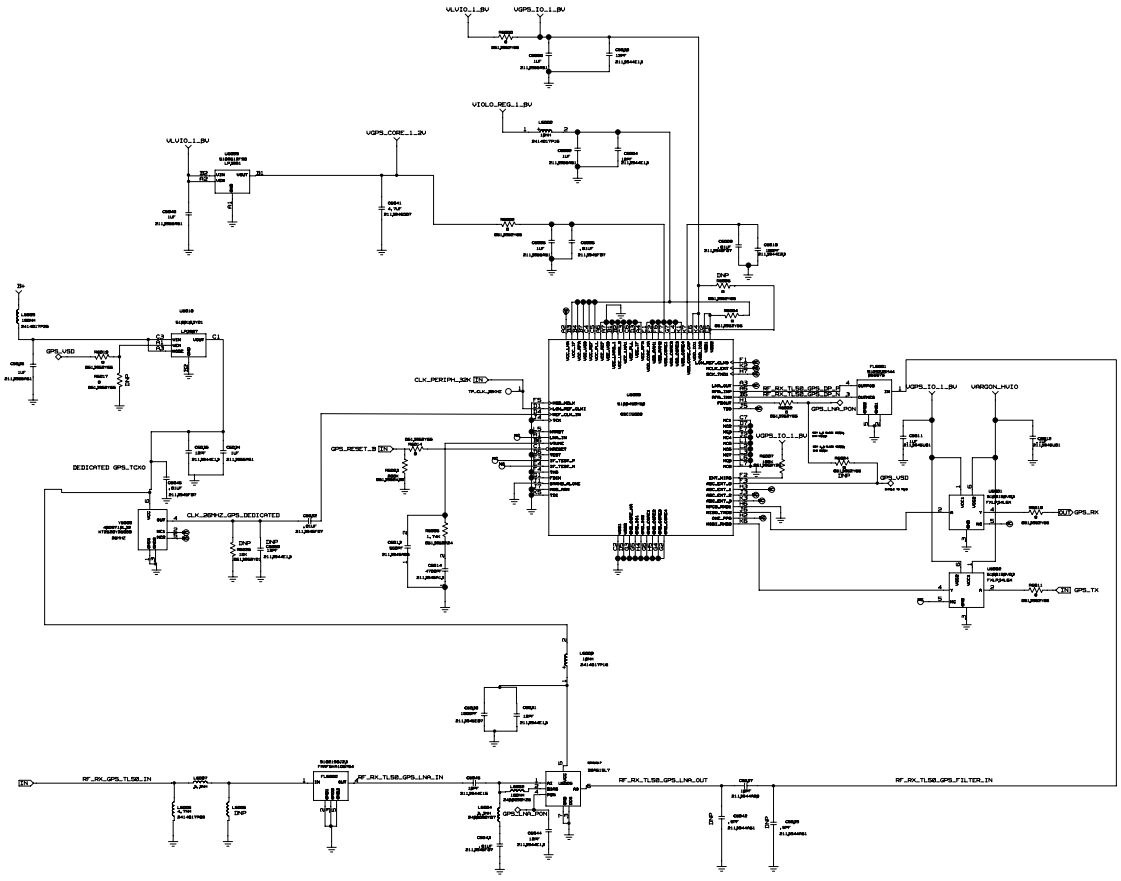

MOTOROLA CONFIDENTIAL PROPRIETARY

Somerset - Main PCB - 84001375001_P1.2 - Schematics

APPROVALS	MOTOROLA MOBILE DEVICES	
ENGINEER: TIMOTHY ORTIZ	BLOCK TITLE: gps	
LAST MODIFIED BY: GARY QUARTANA Thu Sep 04 10:37:17 2008		
MOTOROLA CONFIDENTIAL RESTRICTED	D PROJECT NAME 8471150F01.cpm	REV P1.2
THE DRAWING ON THIS PRINT AND INFORMATION THEREOFTH ARE PROPRIETARY TO MOTOROLA AND SHALL NOT BE USED OR DISCLOSED IN WHOLE OR IN PART WITHOUT THE WRITTEN CONSENT, © COPYRIGHT, MOTOROLA, THIS DOCS NOT IMPLY PUBLICATION	CAD FILE NAME: 8471150F01_P0.brd	PAGE 8 OF 17

REVISIONS				
ZONE	LTR	DESCRIPTION	DATE	APPROVED

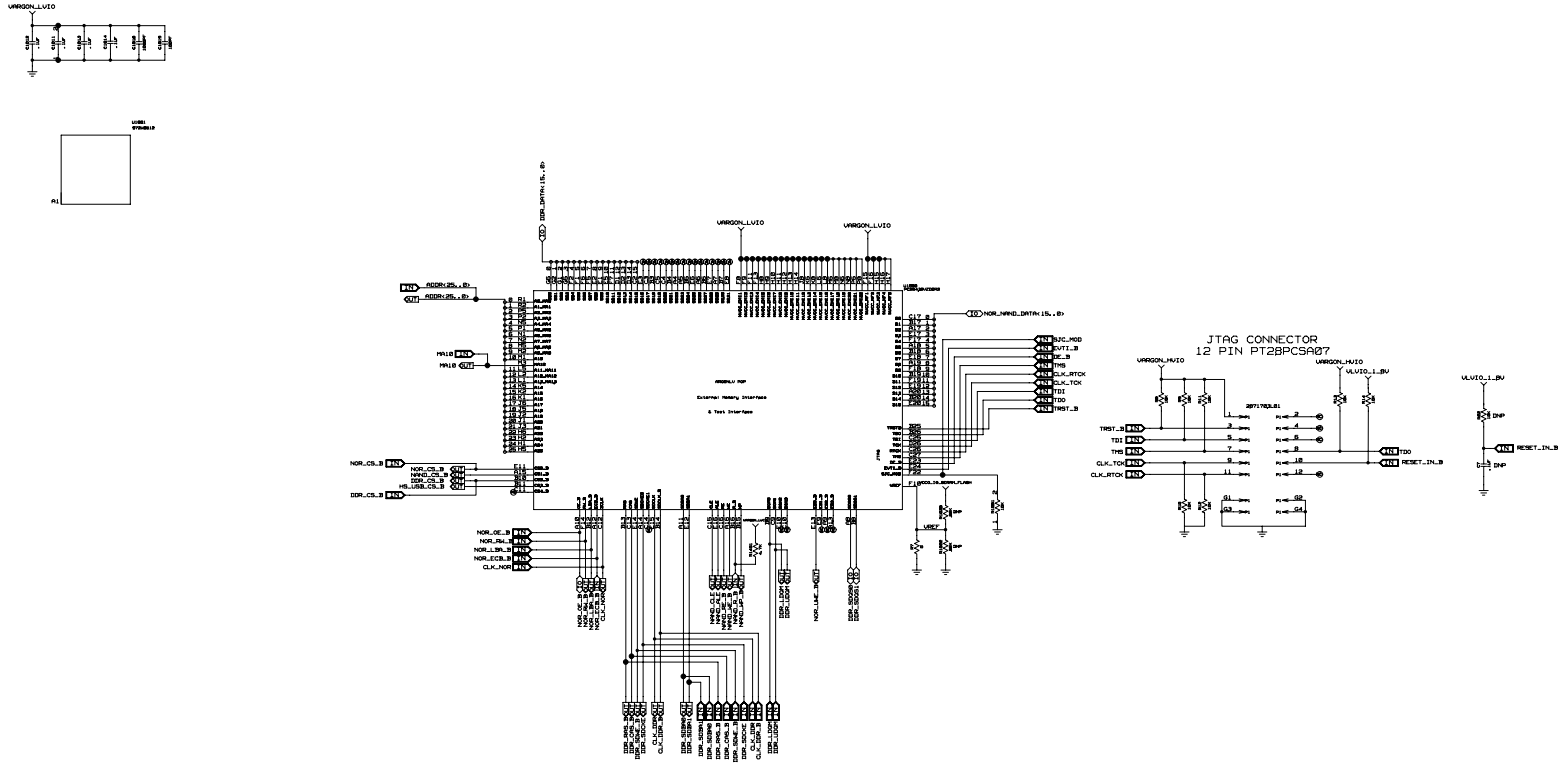

Somerset - Main PCB - 84001375001_P1.2 - Schematics

APPROVALS	MOTOROLA MOBILE DEVICES	
ENGINEER: GARY QUARTANA	BLOCK TITLE: argon MEMORY	
LAST MODIFIED BY: GARY QUARTANA Thu Sep 04 10:37:10 2008		
MOTOROLA CONFIDENTIAL RESTRICTED	D PROJECT NAME: 84711501F01.cpm	REV: P1.2
THE DRAWING ON THIS FRONT AND INFORMATION THEREOF IS PROPRIETARY TO MOTOROLA AND SHALL NOT BE USED OR DISCLOSED IN WHOLE OR IN PART WITHOUT WRITTEN CONSENT. © COPYRIGHT MOTOROLA, INC. 2008 NOT FOR PUBLICATION	CAD FILE NAME: 84711501F01_P0.brd	PAGE 9 OF 17

REVISIONS				
ZONE	LTR	DESCRIPTION	DATE	APPROVED

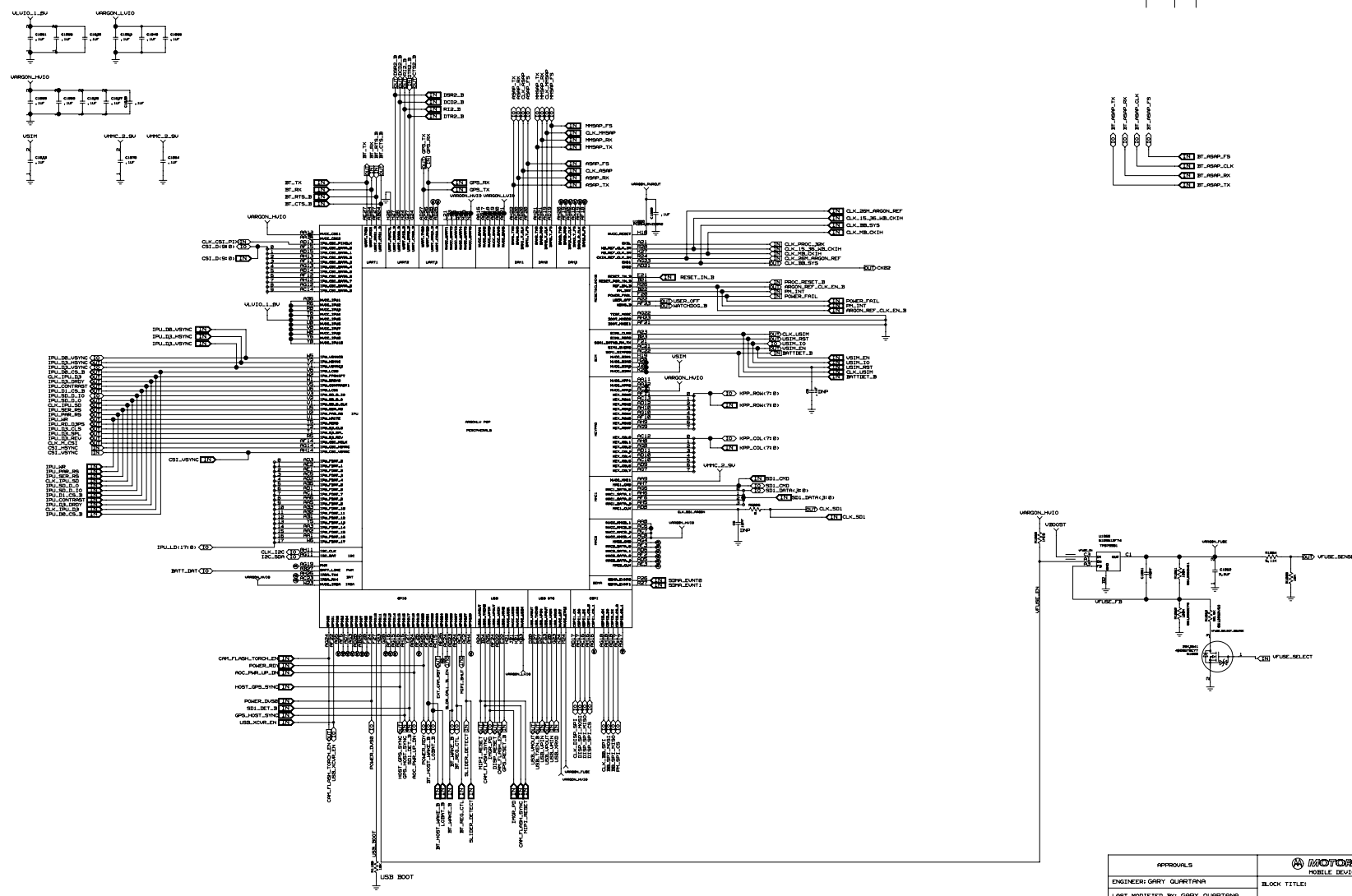

Somerset - Main PCB - 84001375001_P1.2 - Schematics

APPROVALS	MOTOROLA MOBILE DEVICES	
ENGINEER: GARY QUARTANA	BLOCK TITLE: argon PERIPHERALS	
LAST MODIFIED BY: GARY QUARTANA Thu Sep 04 10:37:09 2008	D PROJECT NAME: 84711S0F01.cpm	REV P1.2
MOTOROLA CONFIDENTIAL RESTRICTED	CAD FILE NAME: 84711S0F01_P0.brd	PAGE 10 OF 17

THE DRAWING ON THIS PRINT AND INFORMATION THEREWITH ARE PROPRIETARY TO MOTOROLA AND SHALL NOT BE USED OR DISCLOSED IN WHOLE OR IN PART WITHOUT WRITTEN CONSENT. © COPYRIGHT MOTOROLA, INC. 2008 NOT SINGLY PUBLISHED

REVISIONS				
ZONE	LTR	DESCRIPTION	DATE	APPROVED

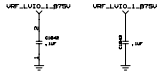

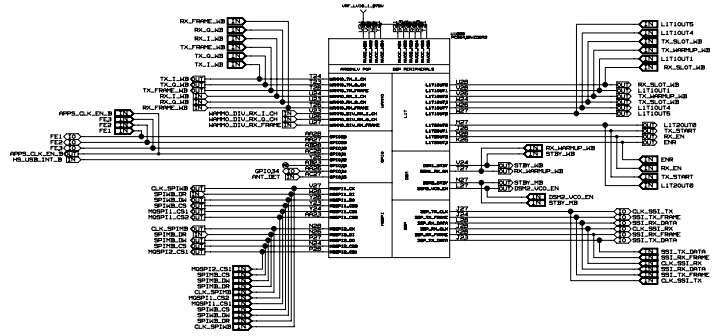

Somerset - Main PCB - 84001375001_P1.2 - Schematics

APPROVALS	MOTOROLA MOBILE DEVICES	
ENGINEER: GARY QUARTANA	BLOCK TITLE: argon DSP	
LAST MODIFIED BY: GARY QUARTANA Thu Sep 04 10:37:10 2008		
MOTOROLA CONFIDENTIAL RESTRICTED	D PROJECT NAME B471150F01.cpm	REV P1.2
THE DRAWING ON THIS FRONT AND INFORMATION THEREIN IS PROPRIETARY TO MOTOROLA AND SHALL NOT BE USED OR DISCLOSED IN WHOLE OR IN PART WITHOUT WRITTEN CONSENT. © COPYRIGHT, MOTOROLA, THIS DOCS NOT IMPLY PUBLICATION	CAD FILE NAME: B471150F01_P0.brd	PAGE 11 OF 17

REVISIONS				
ZONE	LTR	DESCRIPTION	DATE	APPROVED

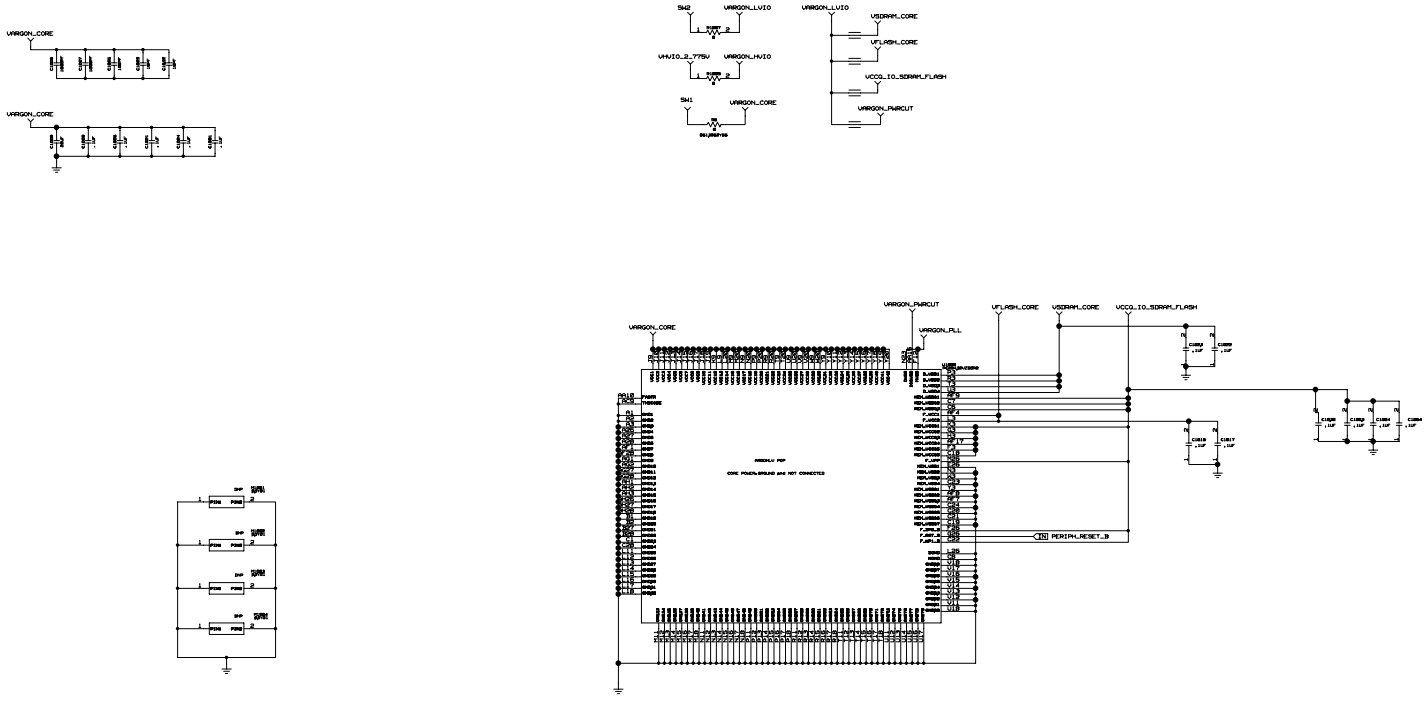

Somerset - Main PCB - 84001375001_P1.2 - Schematics

APPROVALS	MOTOROLA MOBILE DEVICES	
ENGINEER: GARY QUARTANA	BLOCK TITLE: argon CORE_POWER	
LAST MODIFIED BY: GARY QUARTANA Thu Sep 04 10:37:10 2008	D PROJECT NAME: 84711508F01.cpm	REV: P1.2
MOTOROLA CONFIDENTIAL RESTRICTED	CAD FILE NAME: 84711508F01_P0.brd	PAGE 12 OF 17

THE DRAWING ON THIS PRINT AND INFORMATION THEREIN IS ARE PROPRIETARY TO MOTOROLA AND SHALL NOT BE USED OR DISCLOSED IN WHOLE OR IN PART WITHOUT WRITTEN CONSENT. © COPYRIGHT MOTOROLA, INC. 2008 NOT SUBJECT PUBLICATION

REVISIONS				
ZONE	LTR	DESCRIPTION	DATE	APPROVED

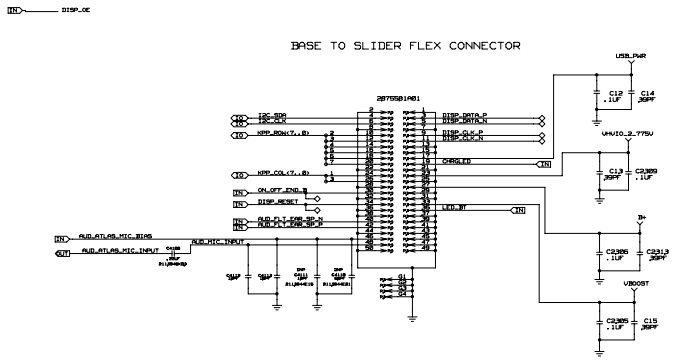

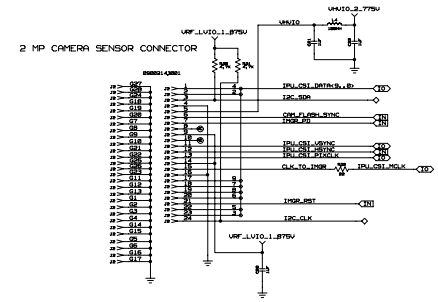

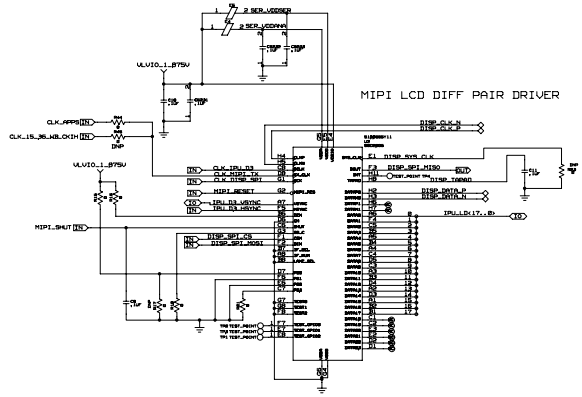

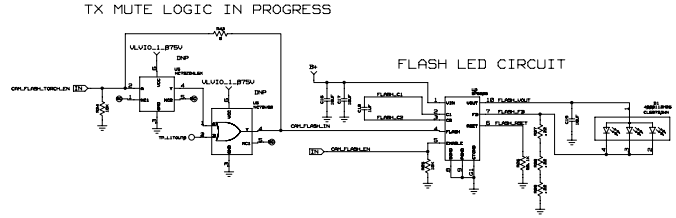

Somerset - Main PCB - 84001375001_P1.2 - Schematics

APPROVALS	MOTOROLA MOBILE DEVICES
ENGINEER: GARY QUARTANA	BLOCK TITLE: board_to_board
LAST MODIFIED BY: GARY QUARTANA Thu Sep 04 10:37:06 2008	
MOTOROLA CONFIDENTIAL RESTRICTED	D PROJECT NAME: 84711508F01.cpm — REV: P1.2
THE DRAWING ON THIS PAGE AND INFORMATION THEREON ARE PROPRIETARY TO MOTOROLA AND SHALL NOT BE USED OR DISCLOSED IN WHOLE OR IN PART WITHOUT WRITTEN CONSENT. © COPYRIGHT MOTOROLA, INC. 2008 NOT SINGLE PUBLICATION	CAD FILE NAME: 84711508F01_P0.brd — PAGE 13 OF 17

REVISIONS				
ZONE	LTR	DESCRIPTION	DATE	APPROVED

BASE KP MATRIX

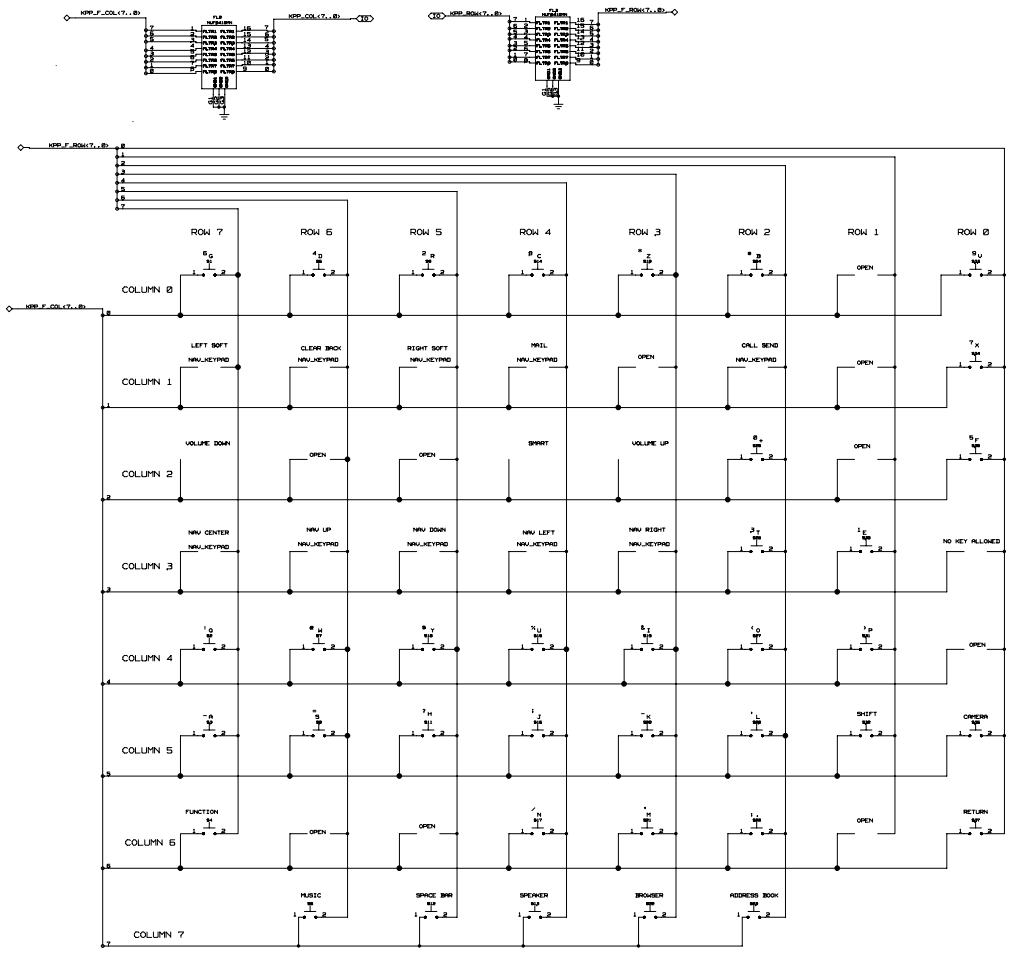

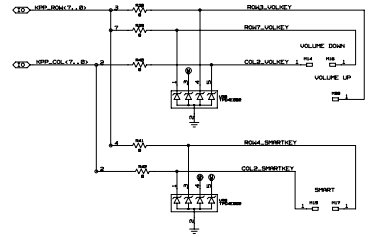

HALL EFFECT

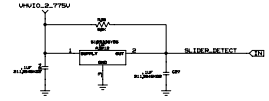

BASE KP EL BACKLIGHT DRIVER

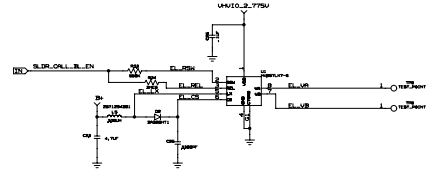

APPROVALS	MOTOROLA MOBILE DEVICES
ENGINEER: JOSE MARTIN	BLOCK TITLE: board_to_board
LAST MODIFIED BY: RAUL LOPEZ Thu Sep 04 10:37:07 2008	RAUL LOPEZ
MOTOROLA CONFIDENTIAL RESTRICTED	D PROJECT NAME: B471150F01.cpm REV: P1.2
THE DRAWING ON THIS PRINT AND INFORMATION THEREON ARE PROPRIETARY TO MOTOROLA AND SHALL NOT BE USED OR DISCLOSED IN WHOLE OR IN PART WITHOUT WRITTEN CONSENT. © COPYRIGHT MOTOROLA, INC. 2008 NOT SUBJ PUBLICATION	CAD FILE NAME: B471150F01_P0.brd PAGE 14 OF 17

Somerset - Main PCB - 84001375001_P1.2 - Schematics

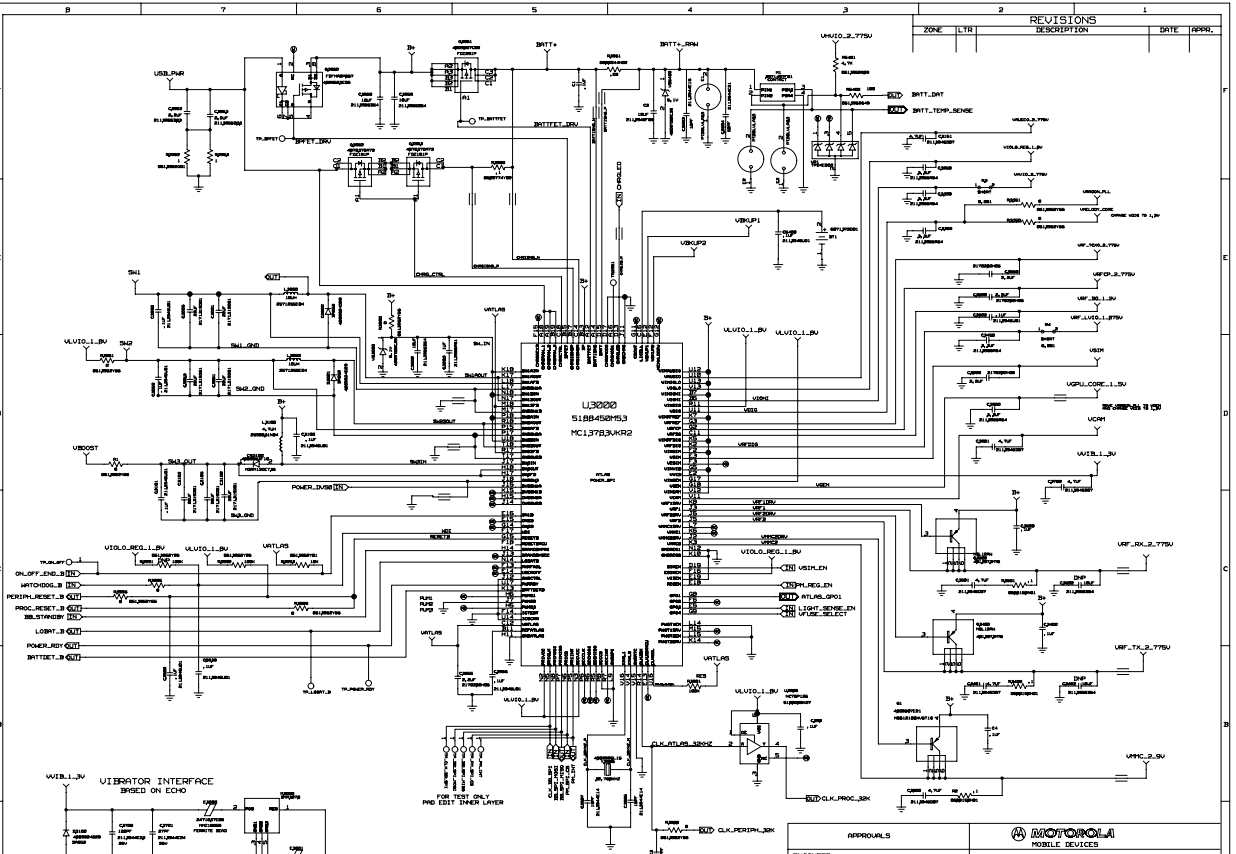

Somerset - Main PCB - 84001375001_P1.2 - Schematics

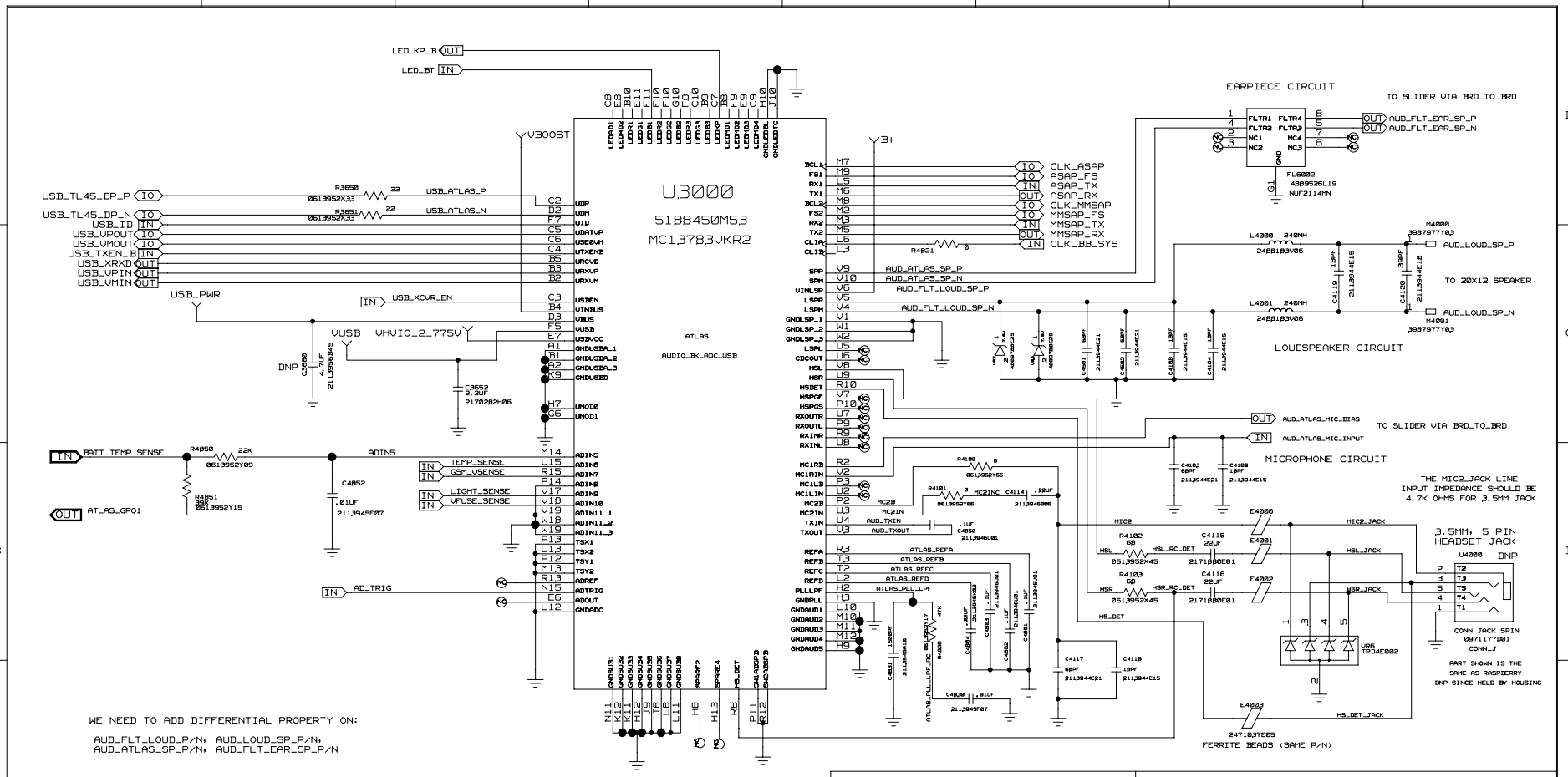

Somerset - Main PCB - 84001375001 P1.2 - Schematics

APPROVALS	MOTOROLA MOBILE DEVICES
ENGINEER: GARY QUARTANA	BLOCK TITLE: atlas AUDIO
LAST MODIFIED BY: GLENN ZAX THU Sep 04 10:37:14 2008	
MOTOROLA CONFIDENTIAL RESTRICTED	B — PROJECT NAME: 8471150F01.cpm — REV: P1.2
THE DRAWING ON THIS PRINT AND INFORMATION THEREWITH ARE PROPRIETARY TO MOTOROLA AND SHALL NOT BE USED OR DISCUSSED IN WHOLE OR IN PART WITHOUT MOTOROLA'S CONSENT, © COPYRIGHT, MOTOROLA, THIS DOES NOT IMPLY PUBLICATION	CAD FILE NAME: 8471150F01_P0.brd — PAGE 16 OF 17

REVISIONS				
ZONE	LTR	DESCRIPTION	DATE	APPROVED

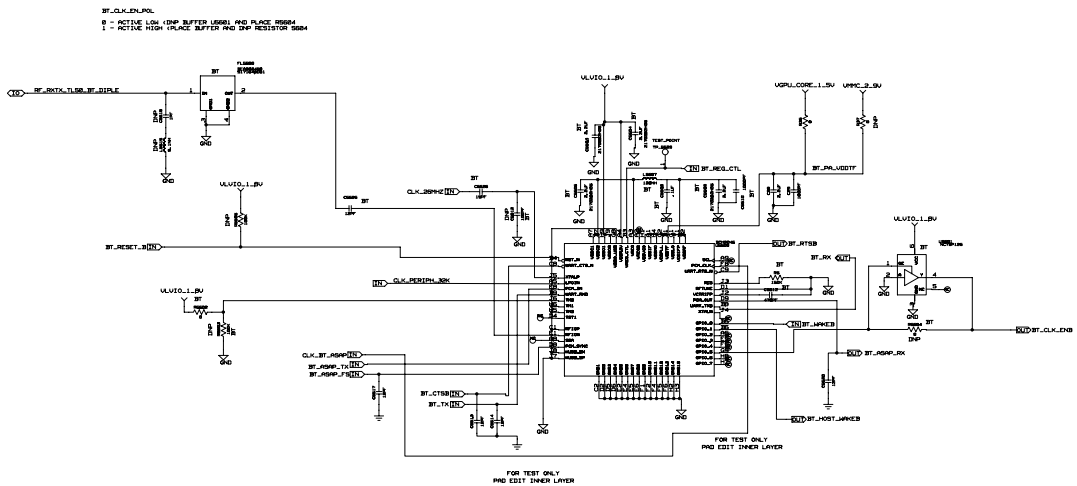

Somerset - Main PCB - 84001375001_P1.2 - Schematics

APPROVALS	MOTOROLA MOBILE DEVICES	
ENGINEER: RAZA KHAN	BLOCK TITLE: bluetooth	
LAST MODIFIED BY: GARY QUARTANA Thu Sep 04 10:37:15 2008		
MOTOROLA CONFIDENTIAL RESTRICTED	PROJECT NAME: 8471150F01.cpm	REV: P1.2
	CAD FILE NAME: 8471150F01_P0.brd	PAGE 17 OF 17