Somerset - Main PCB - 84001375001_P1.1 Top

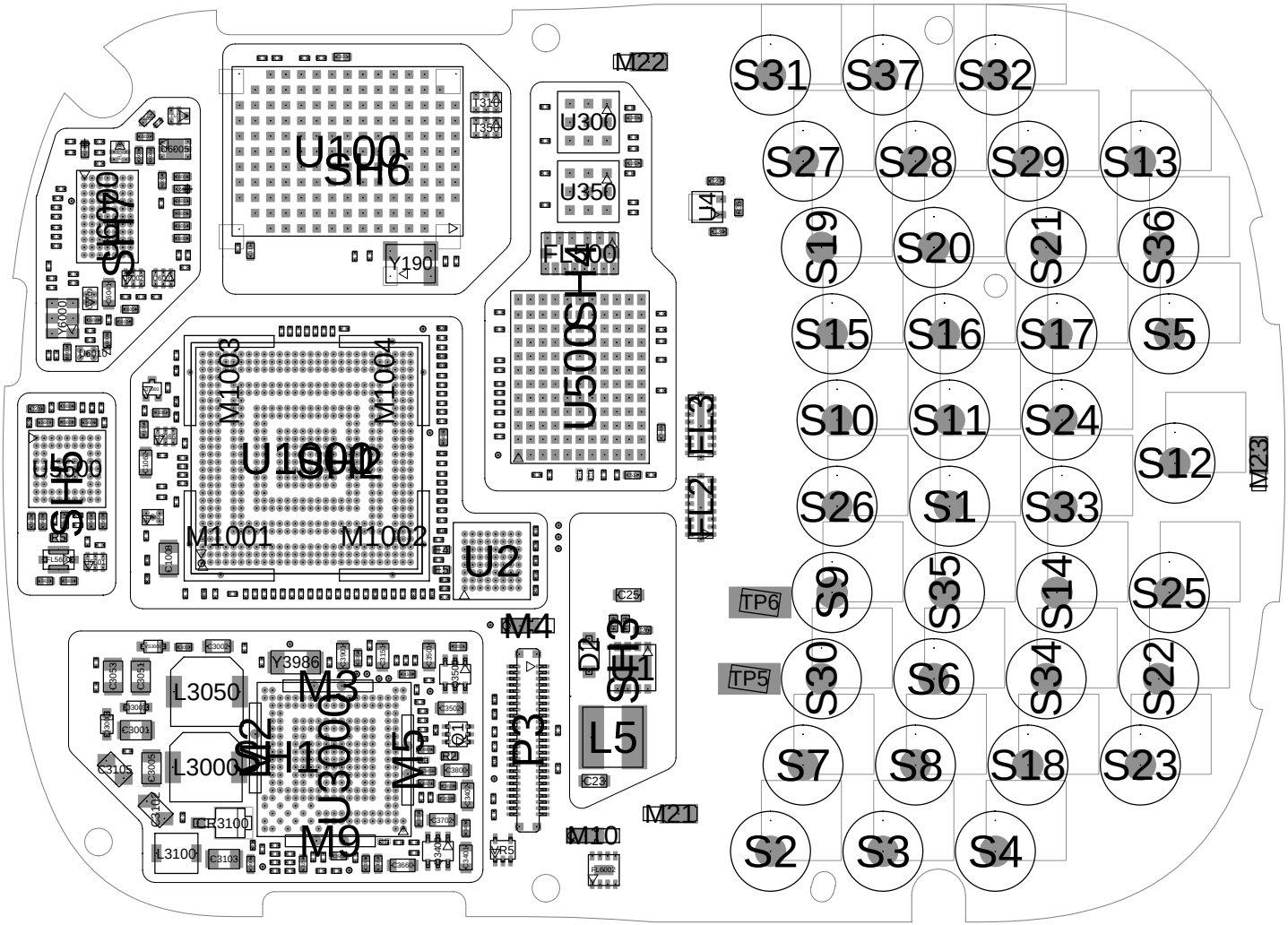

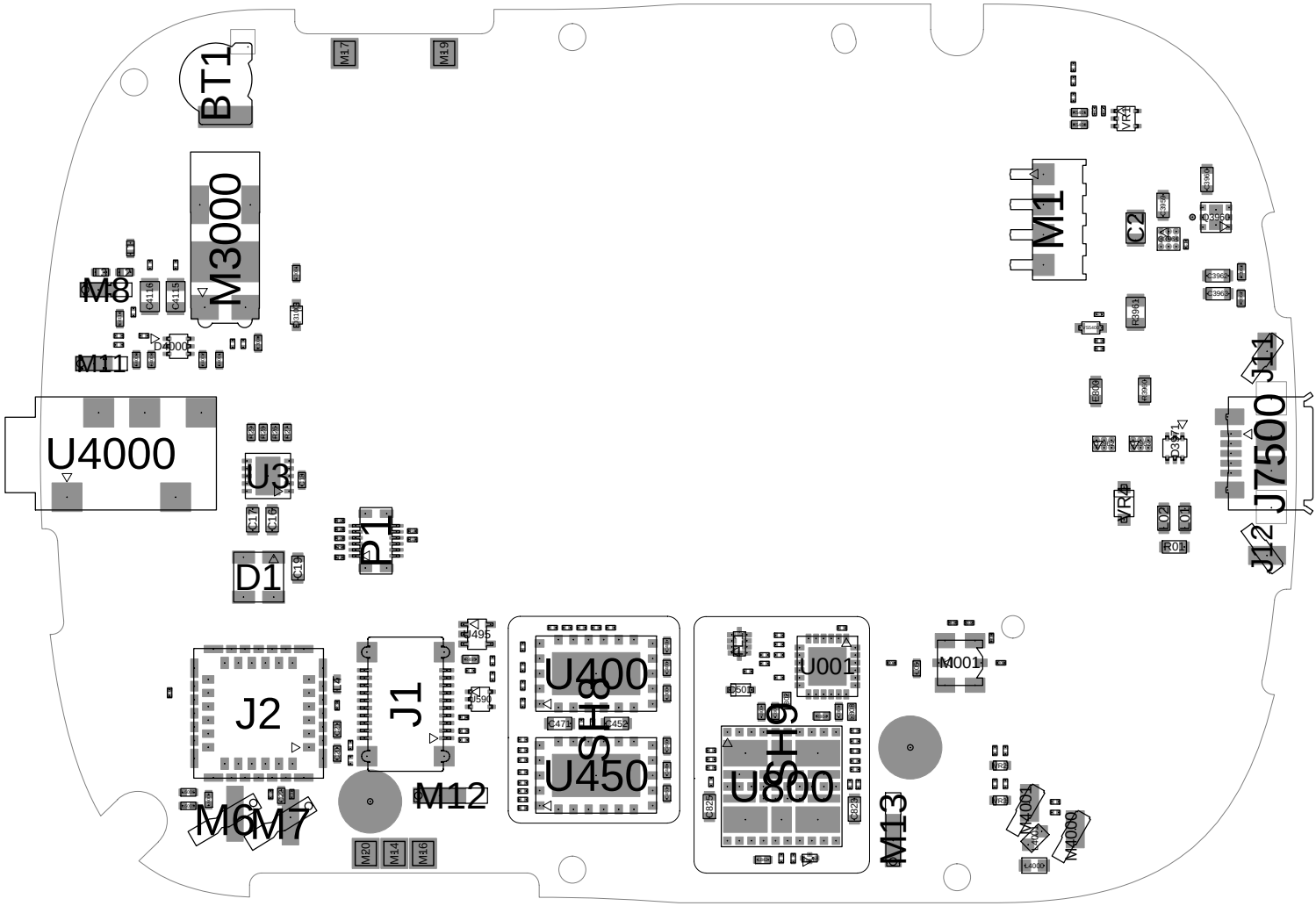

Somerset - Main PCB - 84001375001_P1.1 Bottom

REVISIONS				
ZONE	LTR	DESCRIPTION	DATE	APPROVED

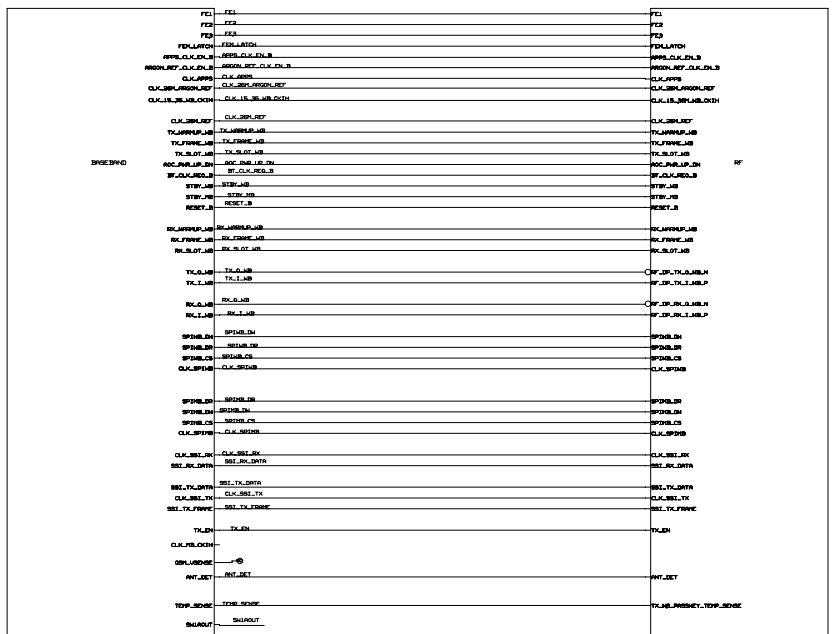

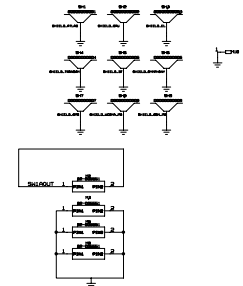

Somerset - Main PCB - 84001375001_P1.1

APPROVALS	MOTOROLA MOBILE DEVICES
ENGINEER: SIAMAK VARNAMKHASTI	BLOCK TITLE: top
LAST MODIFIED BY: SIAMAK VARNAMKHASTI Sat Jul 26 10:57:56 2008	
MOTOROLA CONFIDENTIAL RESTRICTED	D PROJECT NAME 8471150F01.cpm REV P0
	CAD FILE NAME: 8471150F01_P0.brd PAGE 1 OF 17

THE DRAWING ON THIS PRINT AND INFORMATION THEREWITH ARE PROPRIETARY TO MOTOROLA AND SHALL NOT BE USED OR DISCLOSED IN WHOLE OR IN PART WITHOUT MOTOROLA'S CONSENT. © COPYRIGHT, MOTOROLA, THIS DOCS NOT ONLY PUBLICATION

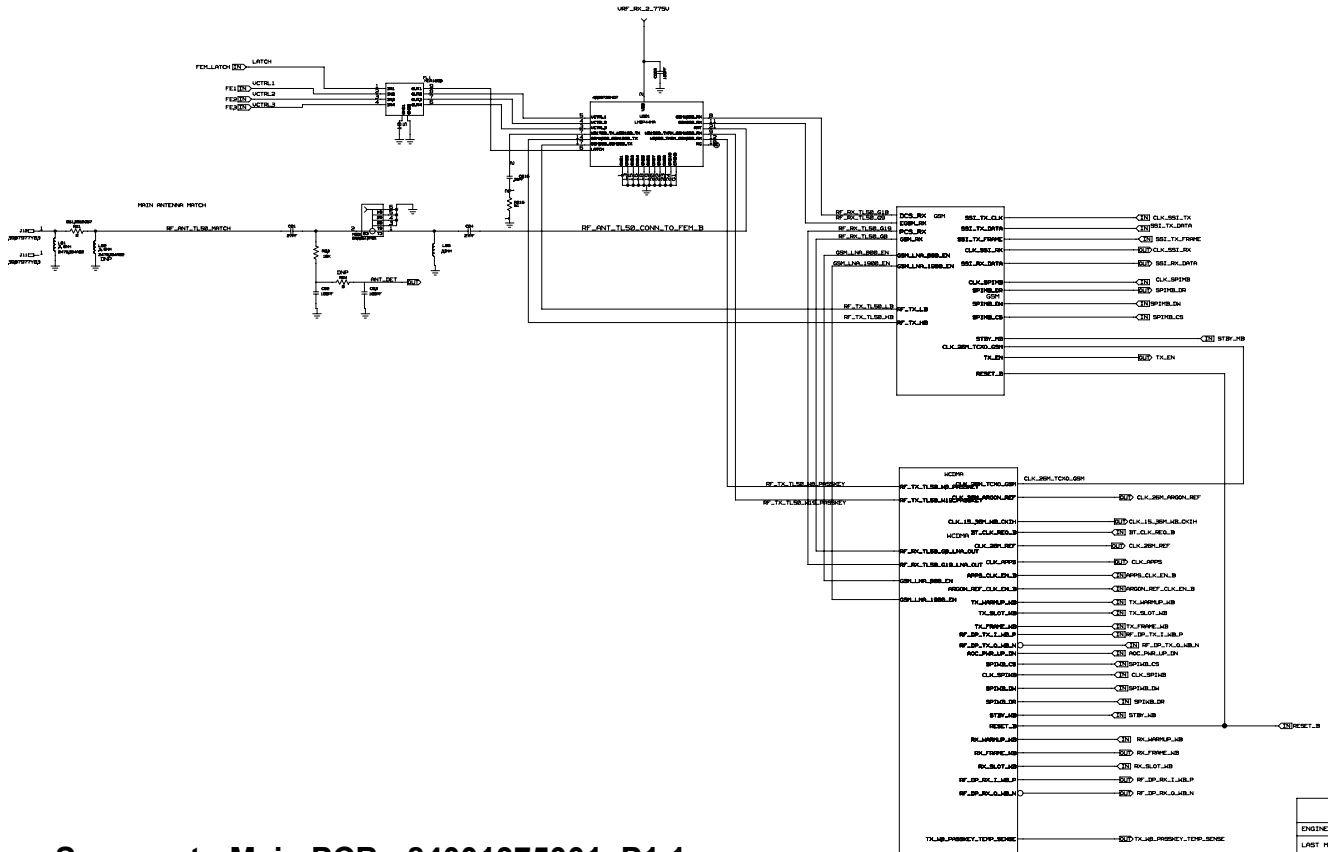

Somerset - Main PCB - 84001375001_P1.1

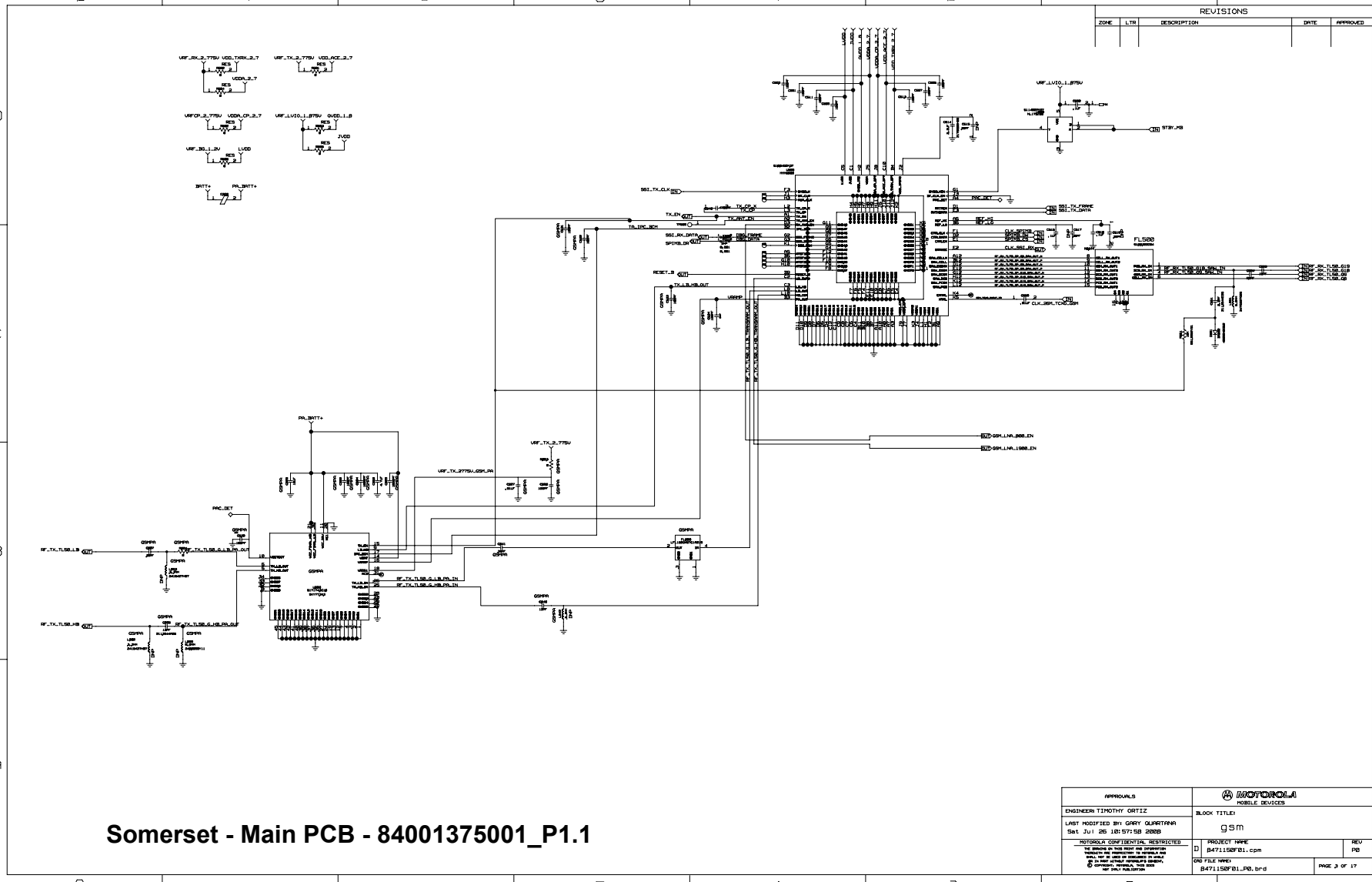

Somerset - Main PCB - 84001375001_P1.1

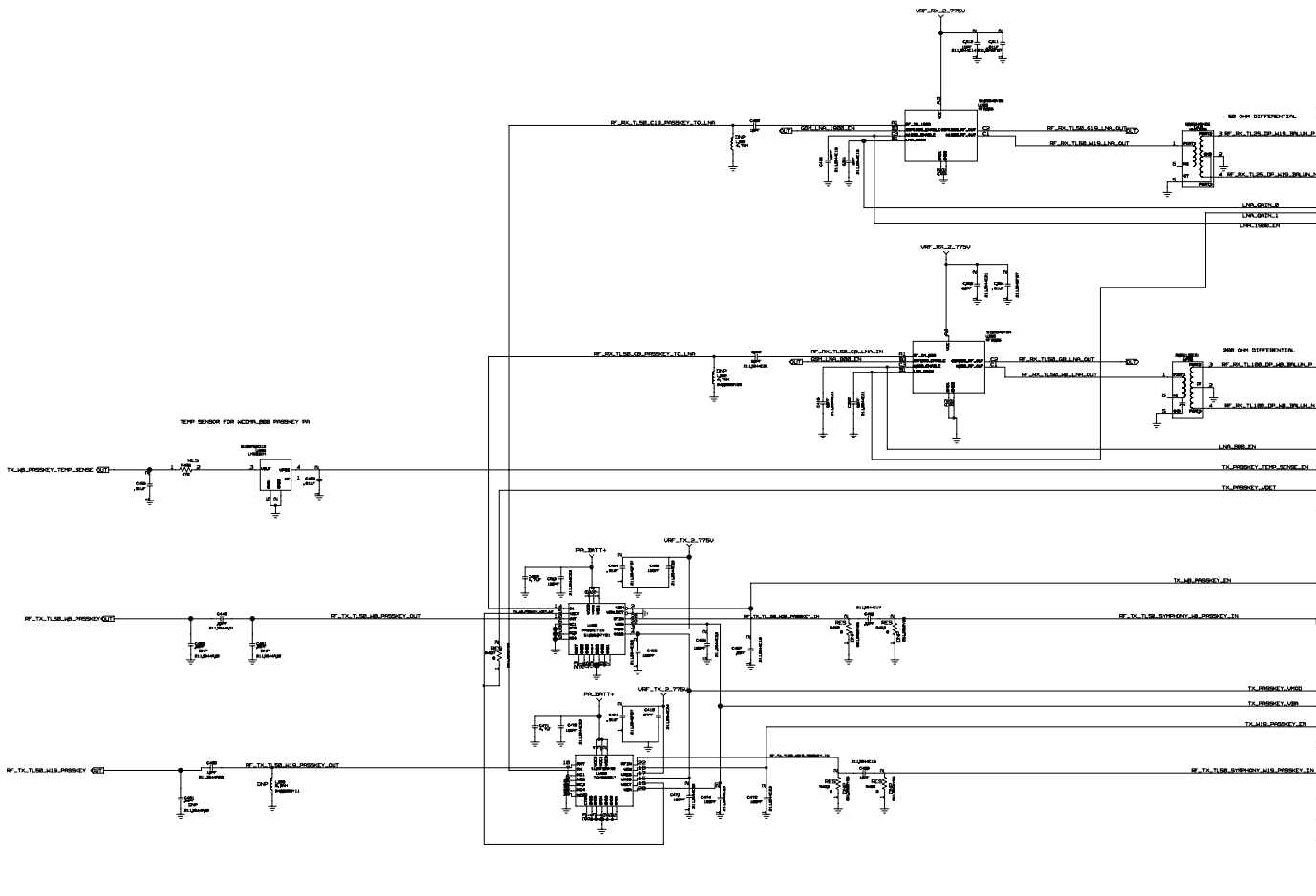

Somerset - Main PCB - 84001375001_P1.1

APPROVALS	MOTOROLA MOBILE DEVICES
ENGINEER: MARIANA RAIMONDO	BLOCK TITLE: wcdma
LAST MODIFIED BY: MARIANA RAIMONDO Sat Jul 26 10:58:00 2008	
MOTOROLA CONFIDENTIAL RESTRICTED	D — PROJECT NAME: 847115F01.cpm — REV: P0
	CAD FILE NAME: 847115F01_P0.brd — PAGE 4 OF 17

REVISIONS				
ZONE	LTR	DESCRIPTION	DATE	APPROVED

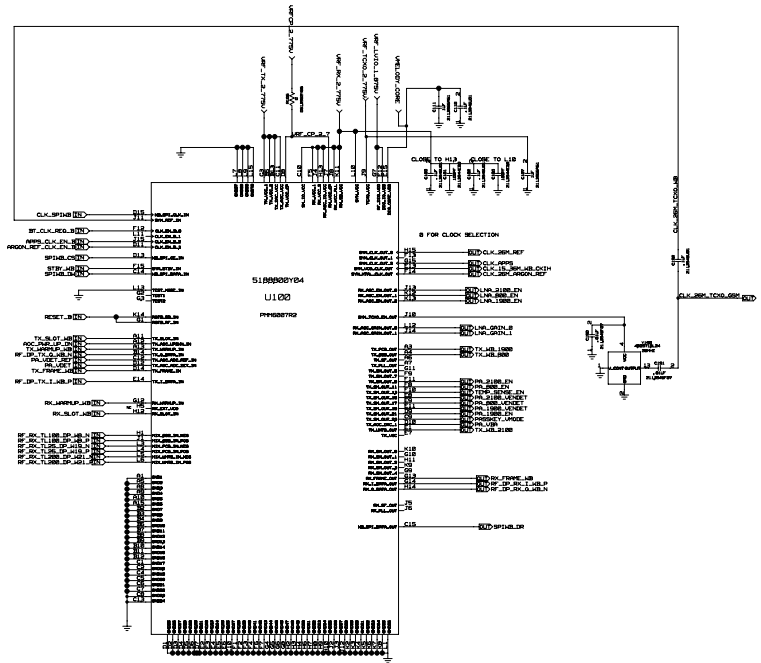

Somerset - Main PCB - 84001375001_P1.1

APPROVALS	MOTOROLA MOBILE DEVICES
ENGINEER: MARIANA RAIMONDO	BLOCK TITLE: wcdma_symphony
LAST MODIFIED BY: MARIANA RAIMONDO Sat Jul 26 10:58:01 2008	
MOTOROLA CONFIDENTIAL RESTRICTED	D PROJECT NAME 8471150F01.cpm REV P0
	CAD FILE NAME: 8471150F01_P0.brd PAGE 5 OF 17

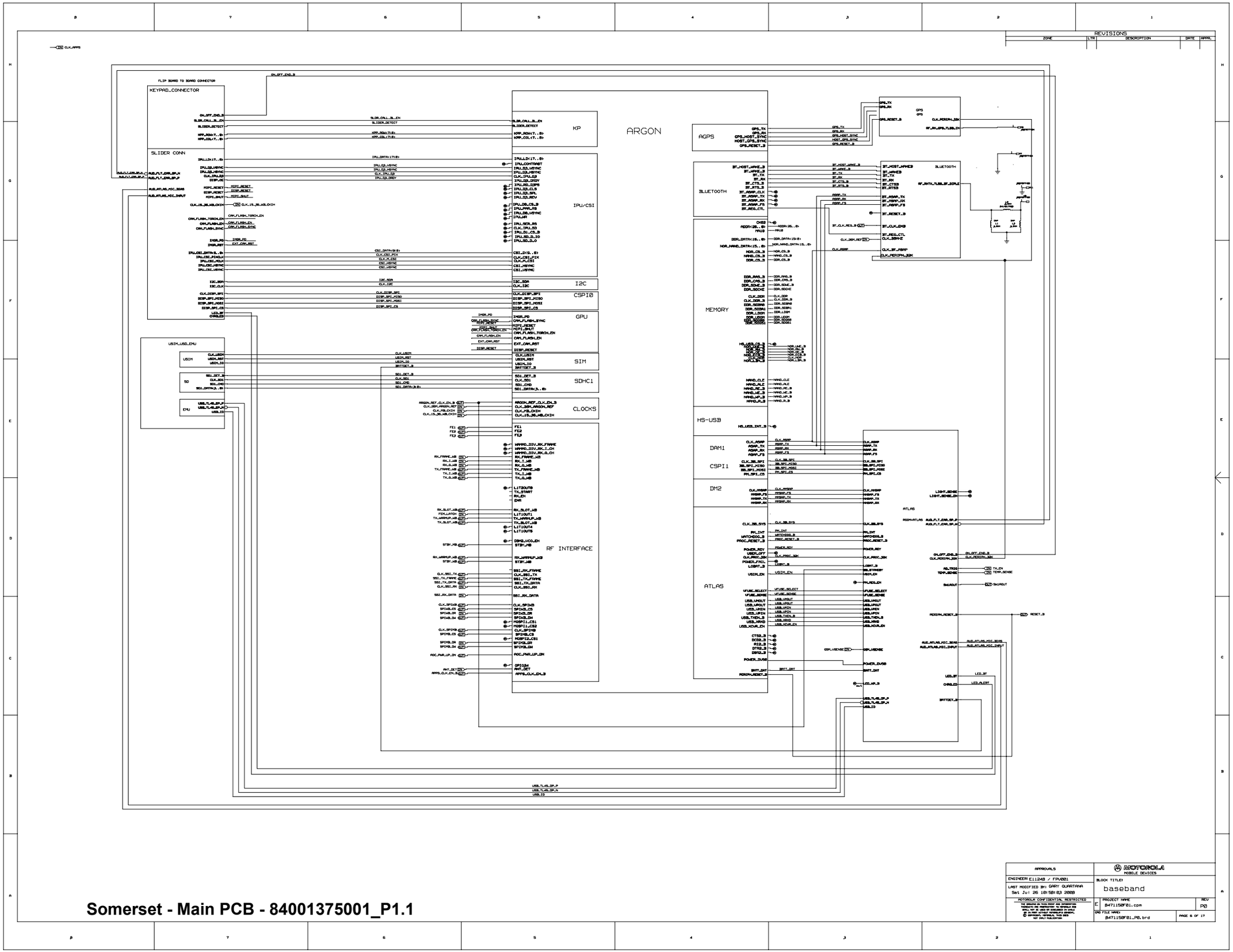

Somerset - Main PCB - 84001375001_P1.1

MOTOROLA CONFIDENTIAL PROPRIETARY

REVISIONS				
ZONE	LTR	DESCRIPTION	DATE	APPROVED

EMU CONNECTOR

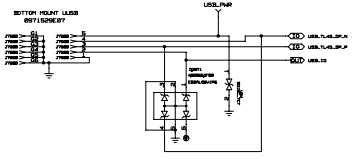

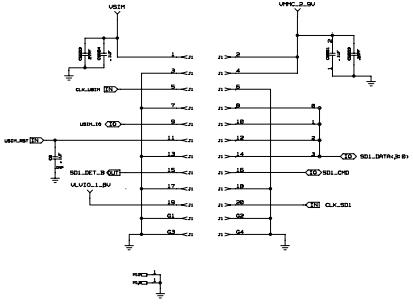

Somerset - Main PCB - 84001375001_P1.1

APPROVALS	MOTOROLA MOBILE DEVICES
ENGINEER: GARY QUARTANA	BLOCK TITLE: sim_emu_transflash
LAST MODIFIED BY: GARY QUARTANA Sat Jul 26 10:58:04 2008	
MOTOROLA CONFIDENTIAL RESTRICTED	D PROJECT NAME: 8471150F01.cpm — REV: P0
	CAD FILE NAME: 8471150F01_P0.brd — PAGE 7 OF 17

REVISIONS				
ZONE	LTR	DESCRIPTION	DATE	APPROVED

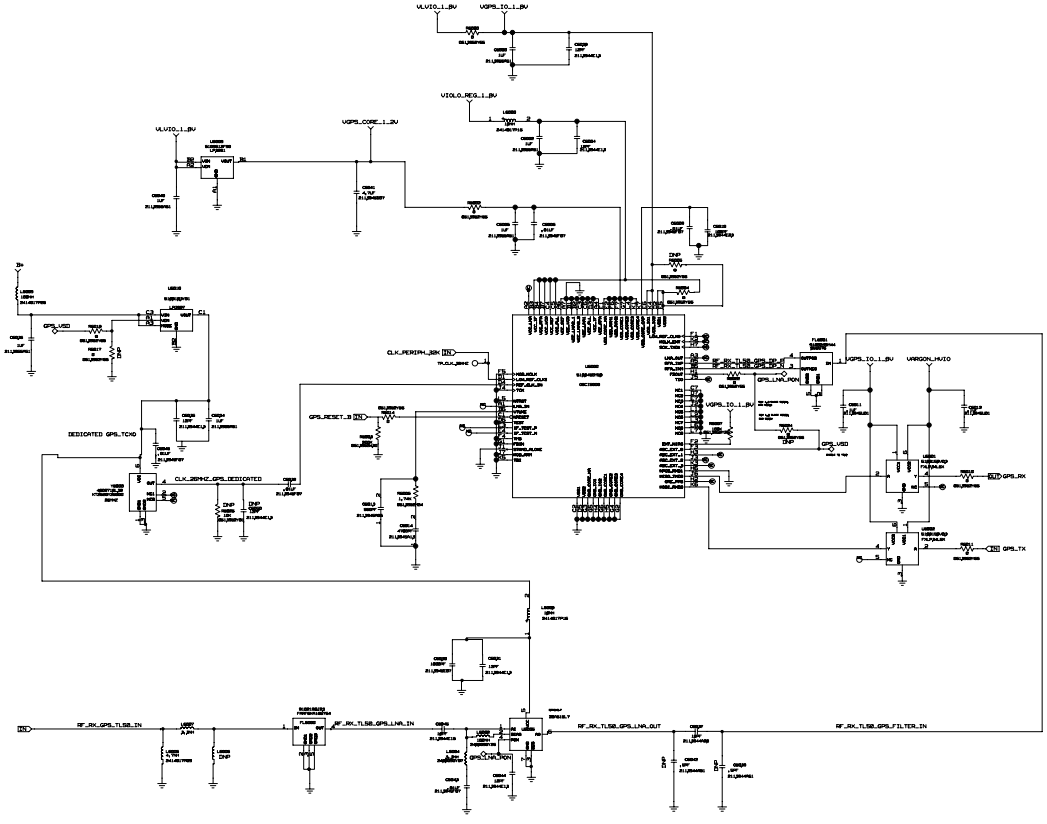

MOTOROLA CONFIDENTIAL PROPRIETARY

Somerset - Main PCB - 84001375001_P1.1

APPROVALS	MOTOROLA MOBILE DEVICES
ENGINEER: TIMOTHY ORTIZ	BLOCK TITLE: gps
LAST MODIFIED BY: GARY QUARTANA Sat Jul 26 10:58:17 2008	
MOTOROLA CONFIDENTIAL RESTRICTED	PROJECT NAME: D 8471150F01.cpm — REV: P0
THE DRAWING ON THIS PRINT AND INFORMATION THEREWITH ARE PROPRIETARY TO MOTOROLA AND SHALL NOT BE USED OR DISCLOSED IN WHOLE OR IN PART WITHOUT WRITTEN CONSENT. © COPYRIGHT, MOTOROLA, THIS DOES NOT IMPLY PUBLICATION	CAD FILE NAME: 8471150F01_P0.brd — PAGE 8 OF 17

REVISIONS				
ZONE	LTR	DESCRIPTION	DATE	APPROVED

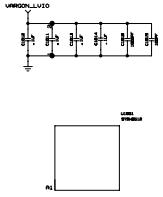

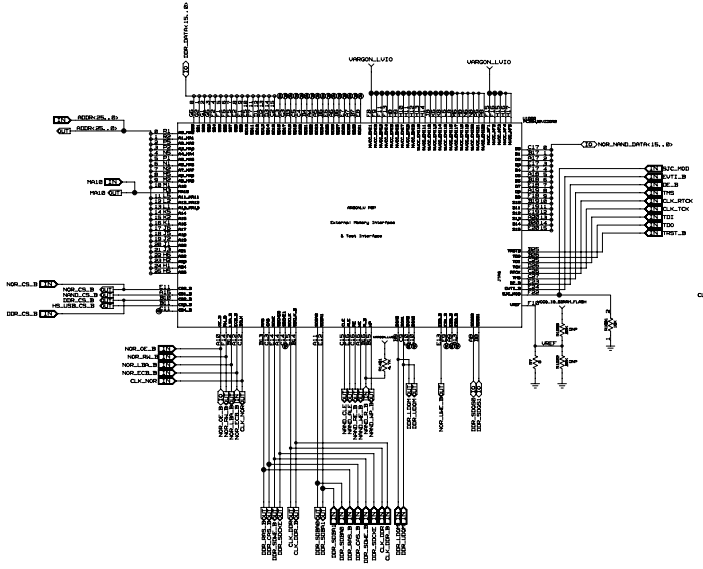

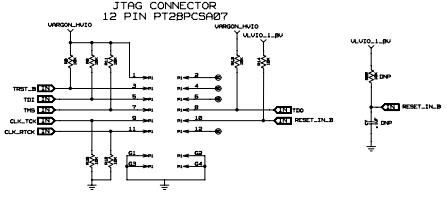

Somerset - Main PCB - 84001375001_P1.1

APPROVALS	MOTOROLA MOBILE DEVICES
ENGINEER: GARY QUARTANA	BLOCK TITLE: argon MEMORY
LAST MODIFIED BY: GARY QUARTANA Sat Jul 26 10:58:11 2008	D PROJECT NAME: 8471150F01.cpm — REV: P0
MOTOROLA CONFIDENTIAL RESTRICTED	CAD FILE NAME: 8471150F01_P0.brd — PAGE 9 OF 17

THE DRAWING OR THIS RECEIVED INFORMATION
IS THE PROPRIETARY PROPERTY OF MOTOROLA
SHALL NOT BE USED OR DISCLOSED IN WHOLE
OR IN PART WITHOUT MOTOROLA'S CONSENT.
© COPYRIGHT, MOTOROLA, THIS DOES
NOT IMPLY PUBLICATION

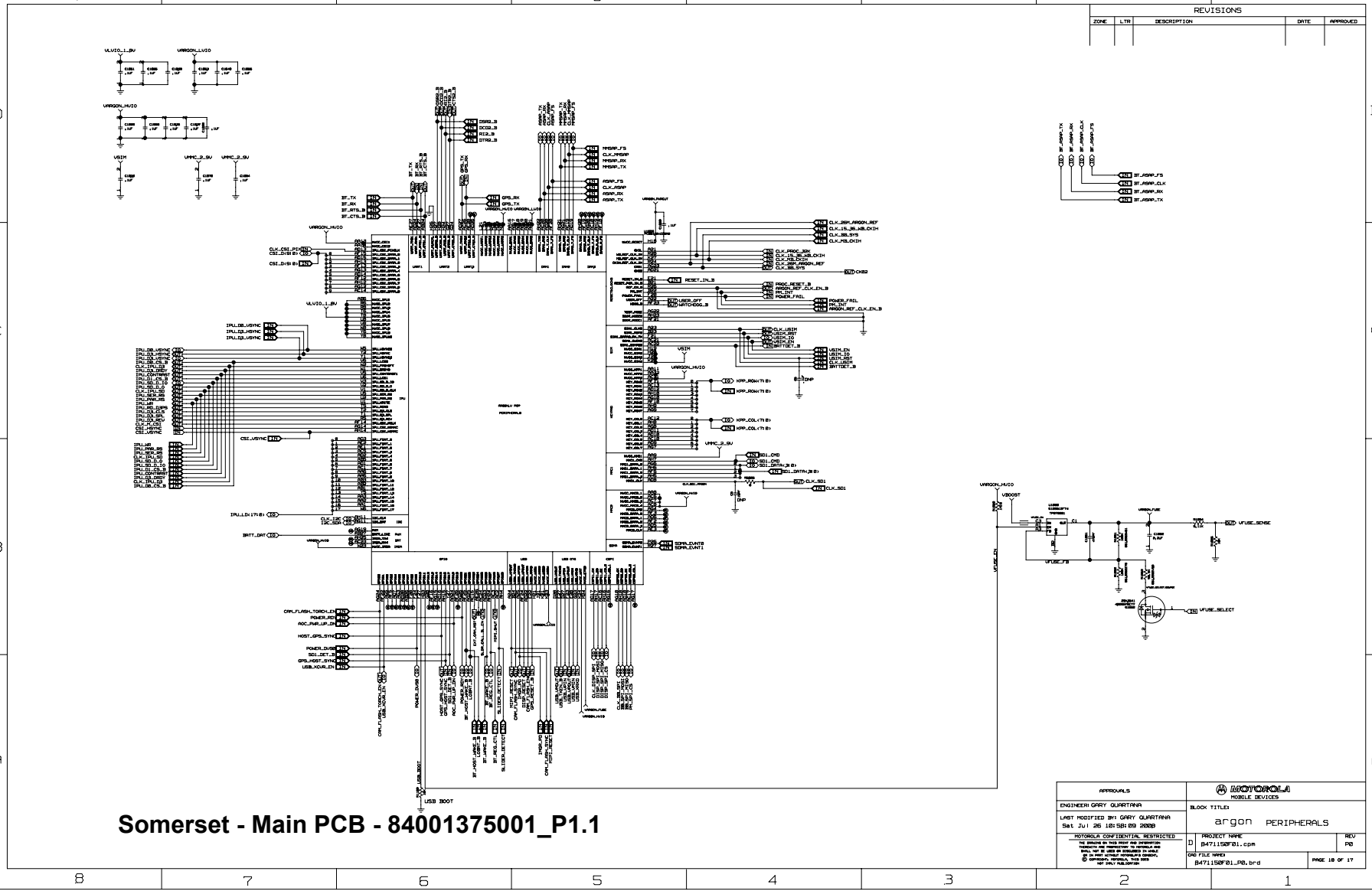

Somerset - Main PCB - 84001375001_P1.1

REVISIONS				
ZONE	LTR	DESCRIPTION	DATE	APPROVED

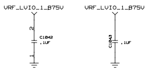

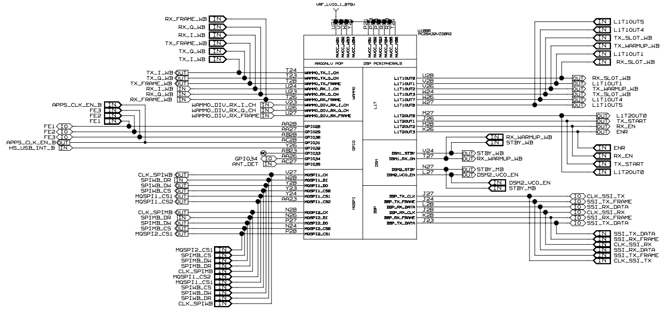

Somerset - Main PCB - 84001375001_P1.1

APPROVALS

ENGINEER: GARY QUARTANA

LAST MODIFIED BY: GARY QUARTANA
Sat Jul 26 10:58:10 2008

MOTOROLA CONFIDENTIAL RESTRICTED

THE DRAWING ON THIS PRINT AND INFORMATION THEREWITH ARE PROPRIETARY TO MOTOROLA AND SHALL NOT BE USED OR DISCLOSED IN WHOLE OR IN PART WITHOUT MOTOROLA'S CONSENT. © COPYRIGHT, MOTOROLA. THIS DOES NOT IMPLY PUBLICATION

MOTOROLA
MOBILE DEVICES

BLOCK TITLE:
argon DSP

D | PROJECT NAME 8471150F01.cpm | REV P0

CAD FILE NAME: 8471150F01_P0.brd

REVISIONS				
ZONE	LTR	DESCRIPTION	DATE	APPROVED

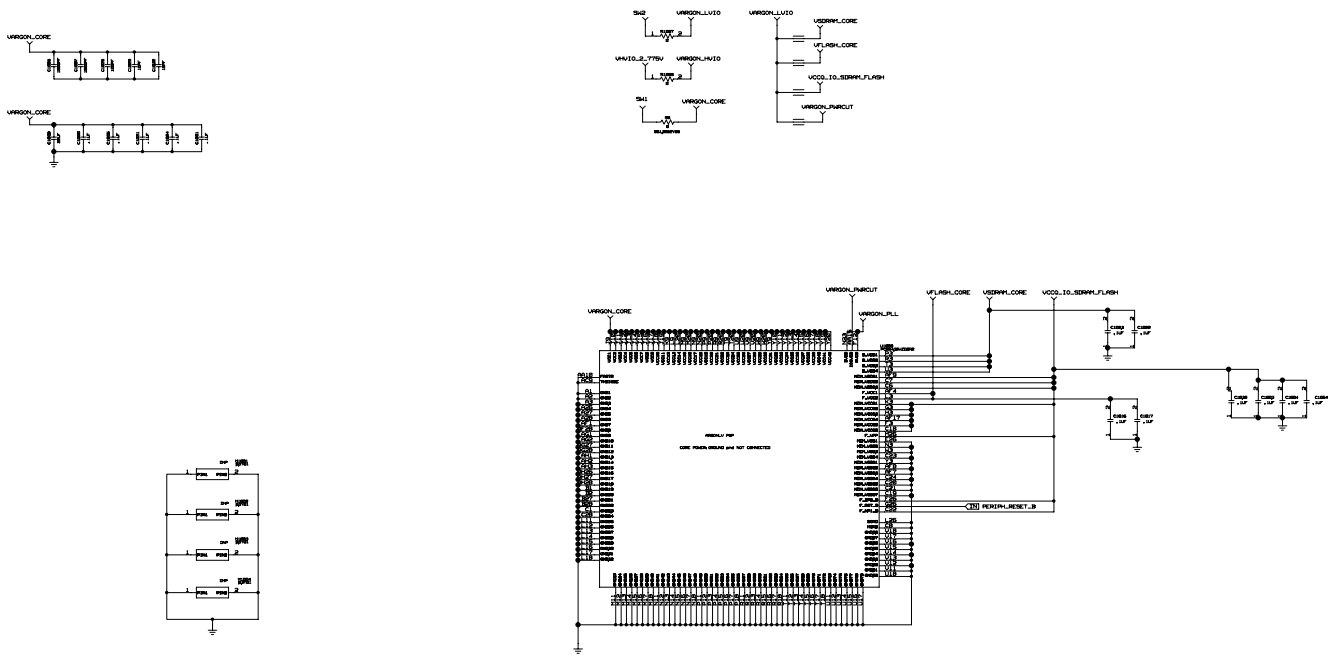

Somerset - Main PCB - 84001375001_P1.1

APPROVALS	MOTOROLA MOBILE DEVICES
ENGINEER: GARY QUARTANA	BLOCK TITLE: argon CORE_POWER
LAST MODIFIED BY: GARY QUARTANA Sat Jul 26 10:58:10 2008	D PROJECT NAME: 8471150F01.cpm — REV: P0
MOTOROLA CONFIDENTIAL RESTRICTED	CAD FILE NAME: 8471150F01_P0.brd — PAGE 12 OF 17

THE DRAWING ON THIS PAGE AND INFORMATION CONTAINED HEREIN IS PROPRIETARY TO MOTOROLA AND SHALL NOT BE USED OR DISCLOSED IN WHOLE OR IN PART WITHOUT MOTOROLA'S CONSENT. © COPYRIGHT, MOTOROLA, THIS DOCS NOT SHALL PUBLISHFIRM

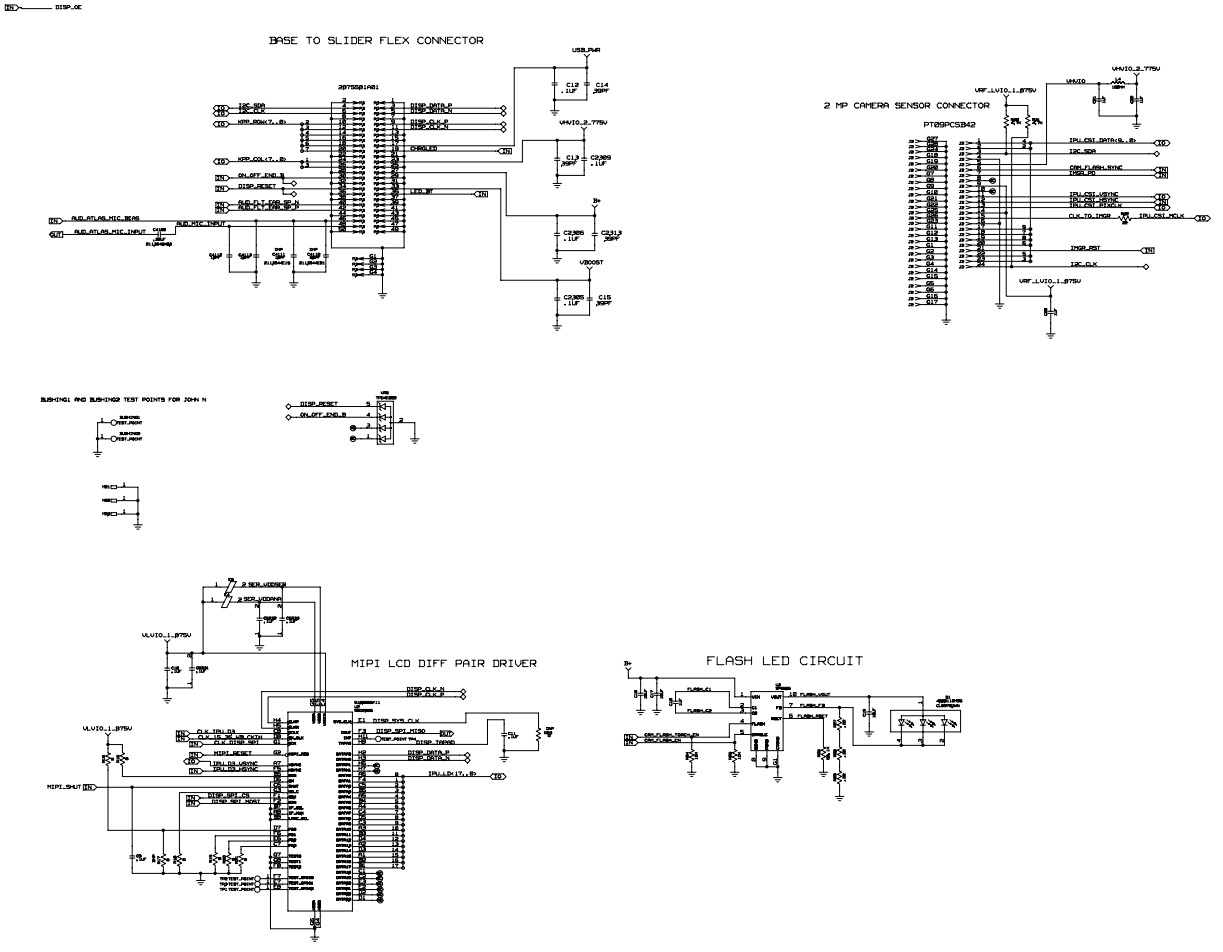

REVISIONS				
ZONE	LTR	DESCRIPTION	DATE	APPROVED

Somerset - Main PCB - 84001375001_P1.1

APPROVALS	MOTOROLA MOBILE DEVICES
ENGINEER: GARY QUARTANA	BLOCK TITLE: board_to_board
LAST MODIFIED BY: GARY QUARTANA Sat Jul 26 10:58:06 2008	
MOTOROLA CONFIDENTIAL RESTRICTED	PROJECT NAME: D 8471150F01.cpm — REV: P0
	CAD FILE NAME: 8471150F01_P0.brd — PAGE 13 OF 17

REVISIONS				
ZONE	LTR	DESCRIPTION	DATE	APPROVED

BASE KP MATRIX

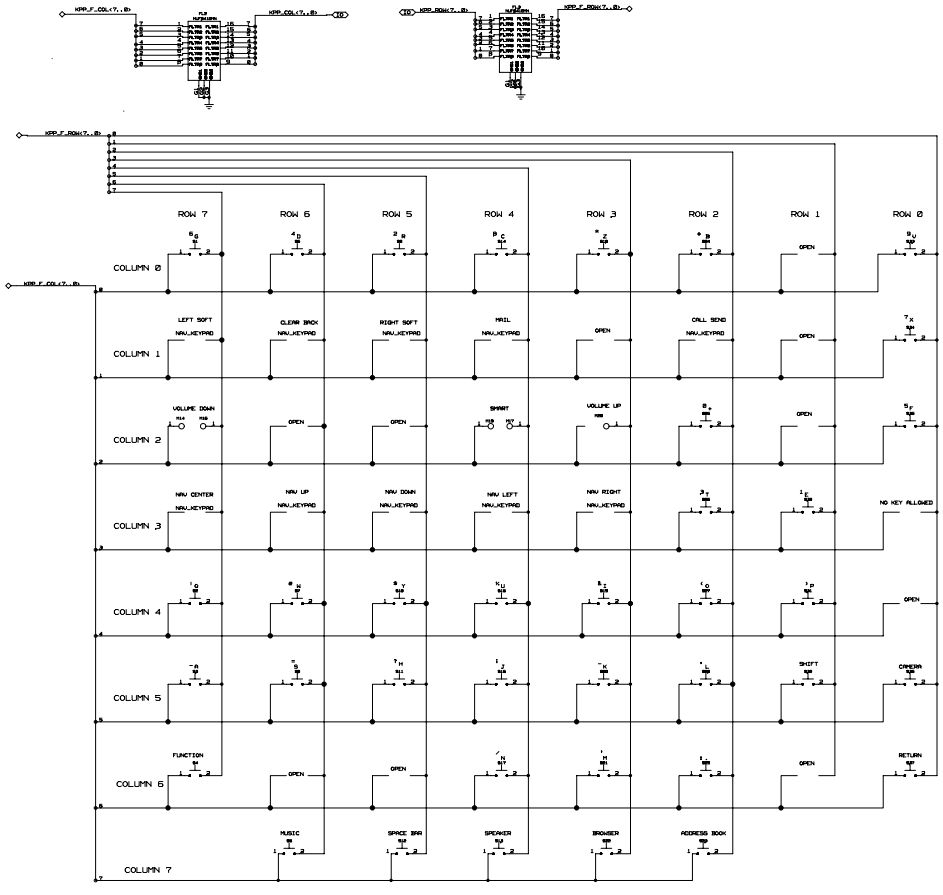

HALL EFFECT

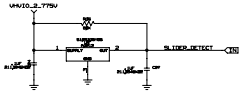

BASE KP EL BACKLIGHT DRIVER

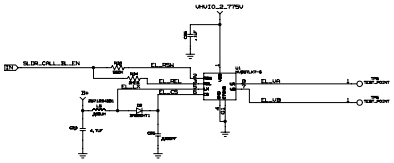

Somerset - Main PCB - 84001375001_P1.1

APPROVALS	MOTOROLA MOBILE DEVICES
ENGINEER: JOSE MARTIN	BLOCK TITLE: board_to_board
LAST MODIFIED BY: RAUL LOPEZ Sat Jul 26 10:58:07 2008	RAUL LOPEZ
MOTOROLA CONFIDENTIAL RESTRICTED	PROJECT NAME: 84711508F01.cpm — REV: P0
THE DRAWING OR THIS RECEIPT AND INFORMATION CONTAINED HEREIN IS PROPRIETARY TO MOTOROLA AND SHALL NOT BE USED OR DISCLOSED IN WHOLE OR IN PART WITHOUT MOTOROLA'S CONSENT. © COPYRIGHT, MOTOROLA, THIS DOCS NOT SHALL PUBLISHTHIS	CAD FILE NAME: 84711508F01_P0.brd — PAGE 14 OF 17

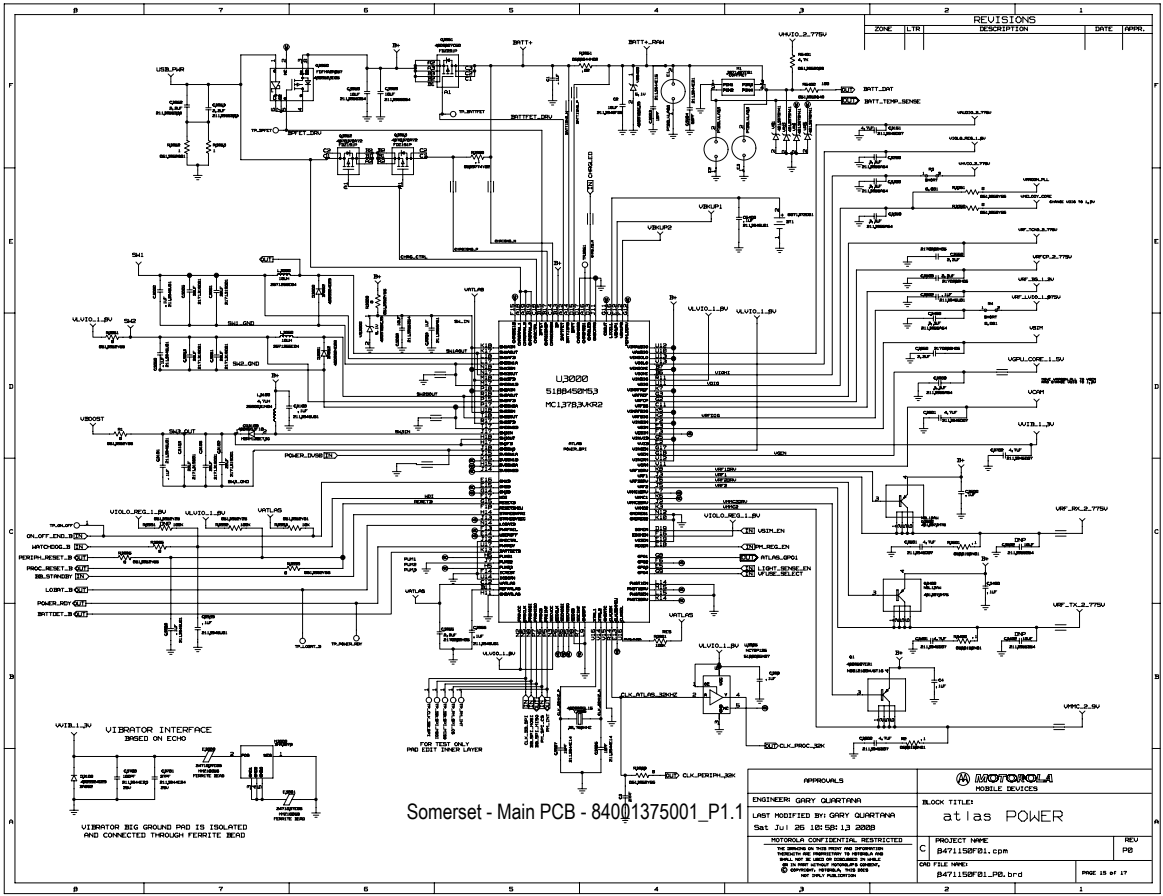
REVISIONS
ZONE
LTR
DESCRIPTION
DATE
APPR.
U3000
51884501453
MC137B3VKR2
VIBRATOR INTERFACE
BASED ON ECHO
VIBRATOR BIG GROUND PAD IS ISOLATED
AND CONNECTED THROUGH FERRITE BEAD
FOR TEST ONLY
PAD EDIT INNER LAYER
Somerset - Main PCB - 84001375001_P1.1
APPROVALS
ENGINEER: GARY QUARTANA
LAST MODIFIED BY: GARY QUARTANA
Sat Jul 26 10:58:13 2008
MOTOROLA CONFIDENTIAL RESTRICTED
MOTOROLA
MOBILE DEVICES
BLOCK TITLE:
atlas POWER
PROJECT NAME
847115BF01.cpm
REV
P0
CAD FILE NAME:
847115BF01_P0.brd
PAGE 15 of 17

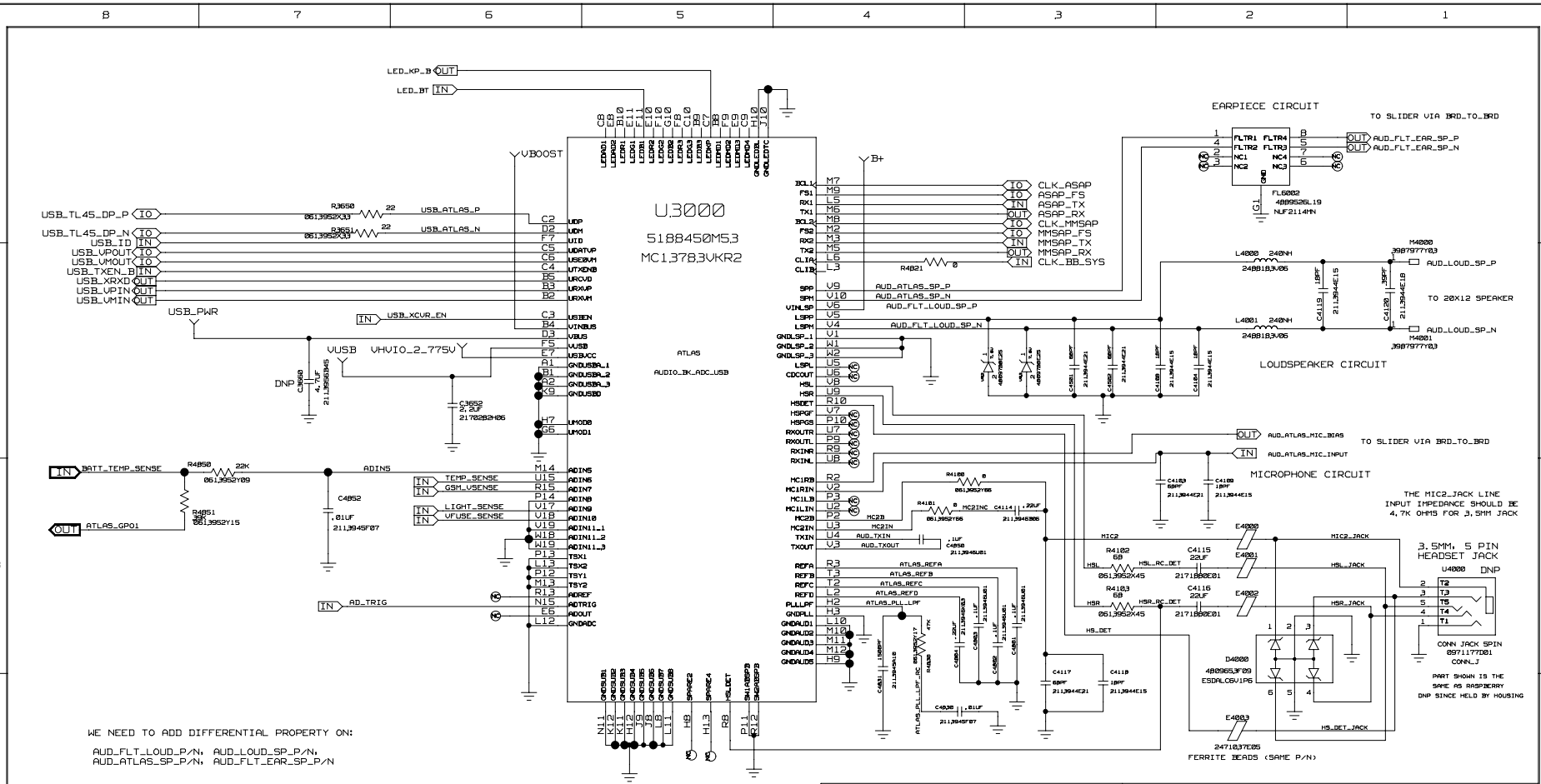

Somerset - Main PCB - 84001375001_P1.1

APPROVALS	MOTOROLA MOBILE DEVICES
ENGINEER: GARY QUARTANA	BLOCK TITLE: atlas AUDIO
LAST MODIFIED BY: GLENN ZAX Sat Jul 26 10:58:14 2008	
MOTOROLA CONFIDENTIAL RESTRICTED	B — PROJECT NAME: 8471150F01.cpm — REV: P0
THE DRAWING ON THIS PRINT AND INFORMATION THEREWITH ARE PROPRIETARY TO MOTOROLA AND SHALL NOT BE USED OR DISCUSSED IN WHOLE OR IN PART WITHOUT MOTOROLA'S CONSENT. © COPYRIGHT, MOTOROLA, THIS DOES NOT IMPLY PUBLICATION	CAD FILE NAME: 8471150F01_P0.brd — PAGE 16 OF 17

REVISIONS				
ZONE	LTR	DESCRIPTION	DATE	APPROVED

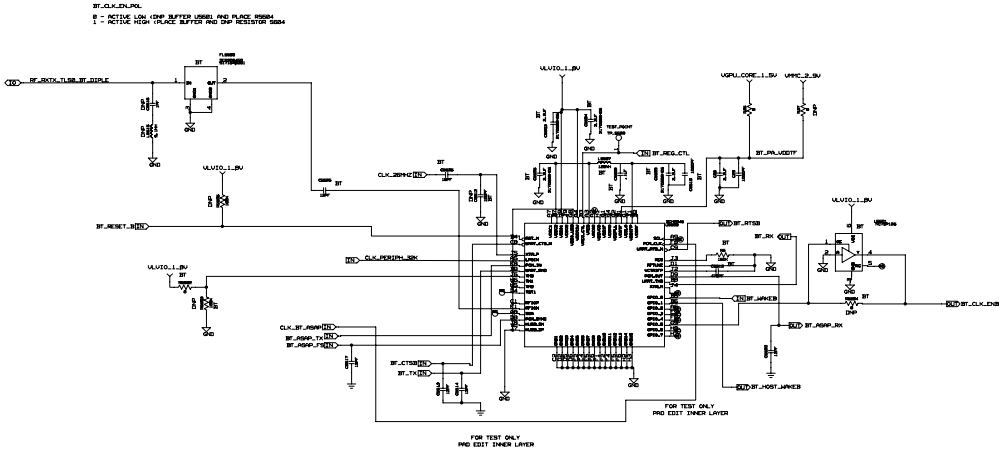

Somerset - Main PCB - 84001375001_P1.1

APPROVALS	MOTOROLA MOBILE DEVICES	
ENGINEER: RAZA KHAN	BLOCK TITLE: bluetooth	
LAST MODIFIED BY: GARY QUARTANA Sat Jul 26 10:58:16 2008		
MOTOROLA CONFIDENTIAL RESTRICTED THE DRAWING ON THIS PAGE AND INFORMATION THEREOF ARE PROPRIETARY TO MOTOROLA AND SHALL NOT BE USED OR DISCLOSED IN WHOLE OR IN PART WITHOUT WRITTEN PERMISSION. © COPYRIGHT, MOTOROLA, THIS DOCS NOT ONLY PUBLICATION	D PROJECT NAME 8471150F01.cpm	REV P0
	CAD FILE NAME: 8471150F01_P0.brd	PAGE 17 OF 17