REVISIONS				
ZONE	LTR	DESCRIPTION	DATE	APPROVED

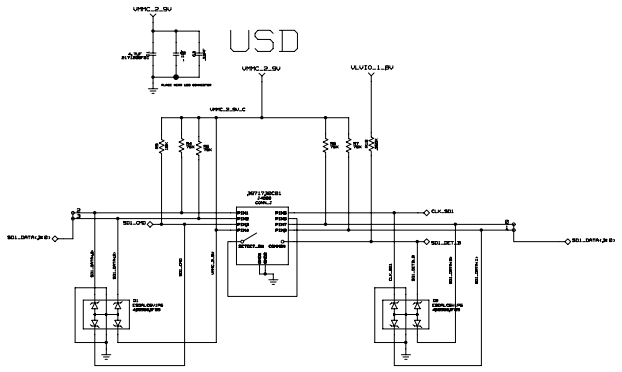

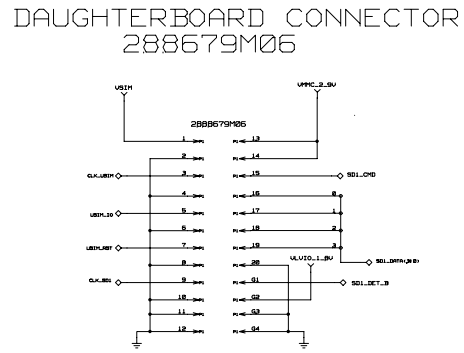

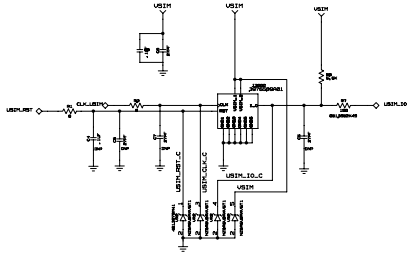

APPROVALS	MOTOROLA MOBILE DEVICES	
ENGINEER: GARY QUARTANA	BLOCK TITLE: top	
LAST MODIFIED BY: GARY QUARTANA Tue May 27 12:54:06 2008		
MOTOROLA CONFIDENTIAL RESTRICTED	D PROJECT NAME 84001376001.cpm	REV P0
THE DRAWING ON THIS PRINT AND INFORMATION THEREIN IS THE PROPRIETARY TO MOTOROLA AND SHALL NOT BE USED OR DISCLOSED IN WHOLE OR IN PART WITHOUT AUTHORIZATION CONSENT. © COPYRIGHT, MOTOROLA, THIS DOES NOT IMPLY PUBLICATION	CAD FILE NAME: 8471150F01_P0.brd	PAGE 1 OF 1