Numonyx™ StrataFlash® Wireless Memory (L30)

28F128L30, 28F256L30

Datasheet

Product Features

- High performance Read-While-Write/Erase
  - 85 ns initial access
  - 52 MHz with zero wait state, 17 ns clock-to-data output synchronous-burst mode
  - 25 ns asynchronous-page mode
  - 4-, 8-, 16-, and continuous-word burst mode
  - Burst suspend
  - Programmable WAIT configuration
  - Buffered Enhanced Factory Programming (BEFP) at 5 µs/byte (Typ)
  - 1.8 V low-power buffered programming at 7 µs/byte (Typ)
- Architecture
  - Asymmetrically-blocked architecture
  - Multiple partitions: 8-Mbit: 128- Mbit devices; 16-Mbit: 256-Mbit devices
  - Four 16-Kword parameter blocks: top or bottom configurations
  - 64-Kword main blocks
  - Dual-operation: Read-While-Write (RWW) or Read-While-Erase (RWE)
  - Status register for partition and device status
- Density and Packaging
  - 128- and 256-Mbit density in VF BGA packages
  - 128/0 and 256/0 Density in SCSP
  - 16-bit wide data bus
- Power
  - V_{CC} (core) = 1.7 V - 2.0 V
  - V_{CCQ} (I/O) = 2.2 V - 3.3 V
  - Standby current: 30 µA (Typ) for 256-Mbit
  - 4-Word synchronous read current: 16 mA (Typ) at 52 MHz
  - Automatic Power Savings mode
- Security
  - OTP space: 64 unique factory device identifier bits; 64 user-programmable OTP bits; Additional 2048 user-programmable OTP bits
  - Absolute write protection: V_{PP} = GND
  - Power-transition erase/program lockout
  - Individual zero-latency block locking
  - Individual block lock-down
- Software
  - 20 µs (Typ) program suspend
  - 20 µs (Typ) erase suspend
  - Numonyx™ Flash Data Integrator (Numonyx™ FDI) optimized
- Quality and Reliability
  - Expanded temperature: –25° C to +85° C
  - Minimum 100,000 erase cycles per block
  - Intel ETOX* VIII process technology (0.13 µm)

251903-11
November 2007

Downloaded from Arrow.com.

INFORMATION IN THIS DOCUMENT IS PROVIDED IN CONNECTION WITH NUMONYX™ PRODUCTS. NO LICENSE, EXPRESS OR IMPLIED, BY ESTOPPEL OR OTHERWISE, TO ANY INTELLECTUAL PROPERTY RIGHTS IS GRANTED BY THIS DOCUMENT. EXCEPT AS PROVIDED IN NUMONYX'S TERMS AND CONDITIONS OF SALE FOR SUCH PRODUCTS, NUMONYX ASSUMES NO LIABILITY WHATSOEVER, AND NUMONYX DISCLAIMS ANY EXPRESS OR IMPLIED WARRANTY, RELATING TO SALE AND/OR USE OF NUMONYX PRODUCTS INCLUDING LIABILITY OR WARRANTIES RELATING TO FITNESS FOR A PARTICULAR PURPOSE, MERCHANTABILITY, OR INFRINGEMENT OF ANY PATENT, COPYRIGHT OR OTHER INTELLECTUAL PROPERTY RIGHT. Numonyx products are not intended for use in medical, life saving, life sustaining, critical control or safety systems, or in nuclear facility applications.

Numonyx B.V. may make changes to specifications and product descriptions at any time, without notice.

Numonyx B.V. may have patents or pending patent applications, trademarks, copyrights, or other intellectual property rights that relate to the presented subject matter. The furnishing of documents and other materials and information does not provide any license, express or implied, by estoppel or otherwise, to any such patents, trademarks, copyrights, or other intellectual property rights.

Designers must not rely on the absence or characteristics of any features or instructions marked "reserved" or "undefined." Numonyx reserves these for future definition and shall have no responsibility whatsoever for conflicts or incompatibilities arising from future changes to them.

Contact your local Numonyx sales office or your distributor to obtain the latest specifications and before placing your product order.

Copies of documents which have an order number and are referenced in this document, or other Numonyx literature may be obtained by visiting Numonyx's website at http://www.numonyx.com.

Numonyx, the Numonyx logo, and StrataFlash are trademarks or registered trademarks of Numonyx B.V. or its subsidiaries in other countries.

*Other names and brands may be claimed as the property of others.

Copyright © 2007, Numonyx B.V., All Rights Reserved.

Downloaded from Arrow.com.

Contents

1.0 Introduction 7
1.1 Nomenclature 7
1.2 Acronyms 7
1.3 Conventions 8

2.0 Functional Overview 9

3.0 Package Information 10
3.1 VF BGA Packages 10
3.2 SCSP Packages 12

4.0 Ballout and Signal Descriptions 14
4.1 Signal Ballout 14
4.1.1 VF BGA Package Ballout 14
4.1.2 SCSP Package Ballout 16
4.2 Signal Descriptions 17
4.3 Memory Map 19

5.0 Maximum Ratings and Operating Conditions 22
5.1 Absolute Maximum Ratings 22
5.2 Operating Conditions 22

6.0 Electrical Specifications 23
6.1 DC Current Characteristics 23
6.2 DC Voltage Characteristics 24

7.0 AC Characteristics 25
7.1 AC Test Conditions 25
7.2 Capacitance 26
7.3 AC Read Specifications 26
7.4 AC Read Specifications 27
7.5 AC Write Specifications 32
7.6 Program and Erase Characteristics 36

8.0 Power and Reset Specifications 37
8.1 Power Up and Down 37
8.2 Reset Specifications 37
8.3 Power Supply Decoupling 38
8.4 Automatic Power Saving 38

9.0 Device Operations 39
9.1 Bus Operations 39
9.1.1 Reads 39
9.1.2 Writes 40
9.1.3 Output Disable 40
9.1.4 Standby 40
9.1.5 Reset 40
9.2 Device Commands 41
9.3 Command Definitions 42

10.0 Read Operations 45
10.1 Asynchronous Page-Mode Read 45
10.2 Synchronous Burst-Mode Read 45
10.2.1 Burst Suspend 46
10.3 Read Configuration Register (RCR) 46
10.3.1 Read Mode 47

Downloaded from Arrow.com.

10.3.2 Latency Count 47
10.3.3 WAIT Polarity 49
10.3.3.1 WAIT Signal Function 49
10.3.4 Data Hold 50
10.3.5 WAIT Delay 50
10.3.6 Burst Sequence 51
10.3.7 Clock Edge 51
10.3.8 Burst Wrap 52
10.3.9 Burst Length 52

11.0 Programming Operations 53
11.1 Word Programming 53
11.1.1 Factory Word Programming 54
11.2 Buffered Programming 54
11.3 Buffered Enhanced Factory Programming 55
11.3.1 Buffered EFP Requirements and Considerations 55
11.3.2 Buffered EFP Setup Phase 56
11.3.3 Buffered EFP Program/Verify Phase 56
11.3.4 Buffered EFP Exit Phase 57
11.4 Program Suspend 57
11.5 Program Resume 57
11.6 Program Protection 58

12.0 Erase Operations 59
12.1 Block Erase 59
12.2 Erase Suspend 59
12.3 Erase Resume 60
12.4 Erase Protection 60

13.0 Security Modes 61
13.1 Block Locking 61
13.1.1 Lock Block 61
13.1.2 Unlock Block 61
13.1.3 Lock-Down Block 61
13.1.4 Block Lock Status 62
13.1.5 Block Locking During Suspend 62
13.2 Protection Registers 63
13.2.1 Reading the Protection Registers 64
13.2.2 Programming the Protection Registers 65
13.2.3 Locking the Protection Registers 65

14.0 Dual-Operation Considerations 66
14.1 Memory Partitioning 66
14.2 Read-While-Write Command Sequences 66
14.2.1 Simultaneous Operation Details 67
14.2.2 Synchronous and Asynchronous RWW Characteristics and Waveforms 67
14.2.2.1 Write operation to asynchronous read transition 67
14.2.2.2 Write to synchronous read operation transition 67
14.2.2.3 Write Operation with Clock Active 68
14.2.3 Read Operation During Buffered Programming Flowchart 68
14.3 Simultaneous Operation Restrictions 69

15.0 Special Read States 70
15.1 Read Status Register 70
15.1.1 Clear Status Register 71
15.2 Read Device Identifier 71
15.3 CFI Query 72

Downloaded from Arrow.com.

Appendix A Write State Machine (WSM) 73
Appendix B Flowcharts 80
Appendix C Common Flash Interface 88
Appendix D Additional Information 98
Appendix E Ordering Information 99

Downloaded from Arrow.com.

Revision History

Revision Date	Revision	Description
10/14/02	-001	Initial Release
02/08/03	-002	Revised 256-Mbit Partition Size Revised 256-Mbit Memory Map Changed WAIT function to de-assert during Asynchronous Operations (Asynchronous Reads and all Writes) Changed WAIT function to active during Synchronous Non-Array Read Updated all Waveforms to reflect new WAIT function Revised Section 8.2.2 Added Synchronous Read to Write transition Section Added new AC specs: R15, R16, R17, R111, R311, R312, W21, and W22 Various text edits
04/11/03	-003	Improved Bin 1 to 85ns from 90ns Improved Frequency to 52MHz from 50MHz Added SCSP for 128/0 and 256/0 Ball-out and Mechanical Drawing
08/04/03	-004	Changed I_{CCS} and I_{CCR} values Added 256-Mbit AC Speed Changed Program and Erase Spec Combined the Buffered Programming Flow Chart and Read While Buffered programming Flow Chart Revised Read While Buffered Programming Flow Chart Revised Appendix A Write State Machine Revised CFI Table 21 CFI Identification Various text edits
12/12/03	-005	New EMTS format
9/02/04	-007	Added Table 18, "Bus Operations Summary" on page 39 The following part number line items were added: - RD48F2000L0ZTQ0, RD48F2000L0ZBQ0 - PF48F3000L0ZTQ0, PF48F3000L0ZBQ0 - RD48F4000L0ZTQ0, RD48F4000L0ZBQ0 - PF48F4000L0ZTQ0, PF48F4000L0ZBQ0
04/22/05	-008	Removed Bin 2 LC and Frequency Support Tables Renamed 256-Mbit UT-SCSP to be 256-Mbit SCSP Expanded Operating Conditions for V_{PPL} to be 0.9 V to 3.3 V Updated Ordering Info Minor text edits Converted datasheet to new template In Table 5, "Bottom Parameter Memory Map, 128-Mbit" on page 21, corrected 256-Mbit Blk 131 address range from 100000 - 10FFFF to 800000 - 80FFFF In Section E.1, "Ordering Information" on page 99, corrected package designators for leaded and lead-free packages from RD/PF to NZ/JZ
02/13/06	-009	Removed 64-Mbit density Various text edits
07/30/07	-010	Changed Ordering information
November 2007	11	Applied Numonyx branding.

Downloaded from Arrow.com.

1.0 Introduction

This document provides information about the Numonyx™ StrataFlash® wireless memory (L30) device and describes the Numonyx™ StrataFlash® Wireless Memory (L30) features, operation, and specifications.

The Numonyx StrataFlash® wireless memory (L30) product is the latest generation of Numonyx StrataFlash® memory devices featuring flexible, multiple-partition, dual operation. It provides high performance synchronous-burst read mode and asynchronous read mode using 1.8 V low-voltage, multi-level cell (MLC) technology.

The multiple-partition architecture enables background programming or erasing to occur in one partition while code execution or data reads take place in another partition. This dual-operation architecture also allows a system to interleave code operations while program and erase operations take place in the background.

The L30 device is manufactured using Intel 0.13 µm ETOX* VIII process technology. It is available in industry-standard chip scale packaging.

1.1 Nomenclature

- **1.8 V**: V_{CC} voltage range of 1.7 V – 2.0 V (except where noted)
- **3.0 V Range**: V_{CCQ} voltage range of 2.2 V – 3.3 V
- **VPP = 9.0 V**: V_{PP} voltage range of 8.5 V – 9.5 V

- **Block**: A group of bits, bytes or words within the flash memory array that erase simultaneously when the Erase command is issued to the device. The Numonyx™ StrataFlash® Wireless Memory (L30) has two block sizes: 16-Kword, and 64-Kword.
- **Main block**: An array block that is usually used to store code and/or data. Main blocks are larger than parameter blocks.
- **Parameter block**: An array block that is usually used to store frequently changing data or small system parameters that traditionally would be stored in EEPROM.
- **Top parameter device**: Previously referred to as a top-boot device, a device with its parameter partition located at the highest physical address of its memory map. Parameter blocks within a parameter partition are located at the highest physical address of the parameter partition.
- **Bottom parameter device**: Previously referred to as a bottom-boot device, a device with its parameter partition located at the lowest physical address of its memory map. Parameter blocks within a parameter partition are located at the lowest physical address of the parameter partition.
- **Partition**: A group of blocks that share common program/erase circuitry. Blocks within a partition also share a common status register. If any block within a partition is being programmed or erased, only status register data (rather than array data) is available when any address within that partition is read.
- **Main partition**: A partition containing only main blocks.
- **Parameter partition**: A partition containing parameter blocks and main blocks.

1.2 Acronyms

- **CUI:** Command User Interface
- MLC: Multi-Level Cell
- **OTP**: One-Time Programmable

Downloaded from Arrow.com.

- **PLR**: Protection Lock Register
- **PR**: Protection Register
- **RCR**: Read Configuration Register
- **RFU**: Reserved for Future Use
- **SR**: Status Register
- **WSM**: Write State Machine

1.3 Conventions

- VCC: signal or voltage connection
- V_{CC}: signal or voltage level
-
- **0x**: hexadecimal number prefix
- **0b**: binary number prefix
-
- **SR[4]**: Denotes an individual register bit.
- **A[15:0]:** Denotes a group of similarly named signals, such as address or data bus.
- **A5**: Denotes one element of a signal group membership, such as an address.
-
- **bit:** binary unit
- **byte:** eight bits
- **word:** two bytes, or sixteen bits
-
- **Kbit:** 1024 bits
- **KByte:** 1024 bytes
- **Kword:** 1024 words
- **Mbit:** 1,048,576 bits
- **MByte:** 1,048,576 bytes
- **MWord:** 1,048,576 words

Downloaded from Arrow.com.

2.0 Functional Overview

This section provides an overview of the features and capabilities of the L30 device.

The L30 device provides read-while-write and read-while-erase capability with density upgrades through 256-Mbit. This family of devices provides high performance at low voltage on a 16-bit data bus. Individually erasable memory blocks are sized for optimum code and data storage.

Each device density contains one parameter partition and several main partitions. The flash memory array is grouped into multiple 8-Mbit or 16-Mbit partitions. By dividing the flash memory into partitions, program or erase operations can take place at the same time as read operations.

Although each partition has write, erase and burst read capabilities, simultaneous operation is limited to write or erase in one partition while other partitions are in read mode. The Numonyx™ StrataFlash® Wireless Memory (L30) allows burst reads that cross partition boundaries. User application code is responsible for ensuring that burst reads don't cross into a partition that is programming or erasing.

Upon initial power up or return from reset, the device defaults to asynchronous page-mode read. Configuring the Read Configuration Register enables synchronous burst-mode reads. In synchronous burst mode, output data is synchronized with a user-supplied clock signal. A WAIT signal provides easy CPU-to-flash memory synchronization.

In addition to the enhanced architecture and interface, the device incorporates technology that enables fast factory program and erase operations. Designed for low-voltage systems, the Numonyx™ StrataFlash® Wireless Memory (L30) supports read operations with V_{CC} at 1.8 V, and erase and program operations with V_{PP} at 1.8 V or 9.0 V. Buffered Enhanced Factory Programming (Buffered EFP) provides the fastest flash array programming performance with V_{PP} at 9.0 Volt, which increases factory throughput. With V_{PP} at 1.8 V, VCC and VPP can be tied together for a simple, ultra low power design. In addition to voltage flexibility, a dedicated VPP connection provides complete data protection when V_{PP} is less than V_{PPLK}.

A Command User Interface (CUI) is the interface between the system processor and all internal operations of the device. An internal Write State Machine (WSM) automatically executes the algorithms and timings necessary for block erase and program. A Status Register indicates erase or program completion and any errors that may have occurred.

An industry-standard command sequence invokes program and erase automation. Each erase operation erases one block. The Erase Suspend feature allows system software to pause an erase cycle to read or program data in another block. Program Suspend allows system software to pause programming to read other locations. Data is programmed in word increments.

The Numonyx™ StrataFlash® Wireless Memory (L30) offers power savings through Automatic Power Savings (APS) mode and standby mode. The device automatically enters APS following read-cycle completion. Standby is initiated when the system deselects the device by deasserting CE# or by asserting RST#. Combined, these features can significantly reduce power consumption.

The Numonyx™ StrataFlash® Wireless Memory (L30)'s protection register allows unique flash device identification that can be used to increase system security. Also, the individual Block Lock feature provides zero-latency block locking and unlocking.

Downloaded from Arrow.com.

3.0 Package Information

3.1 VF BGA Packages

Figure 1: 128-Mbit, 56-Ball VF BGA Package Drawing and Dimensions

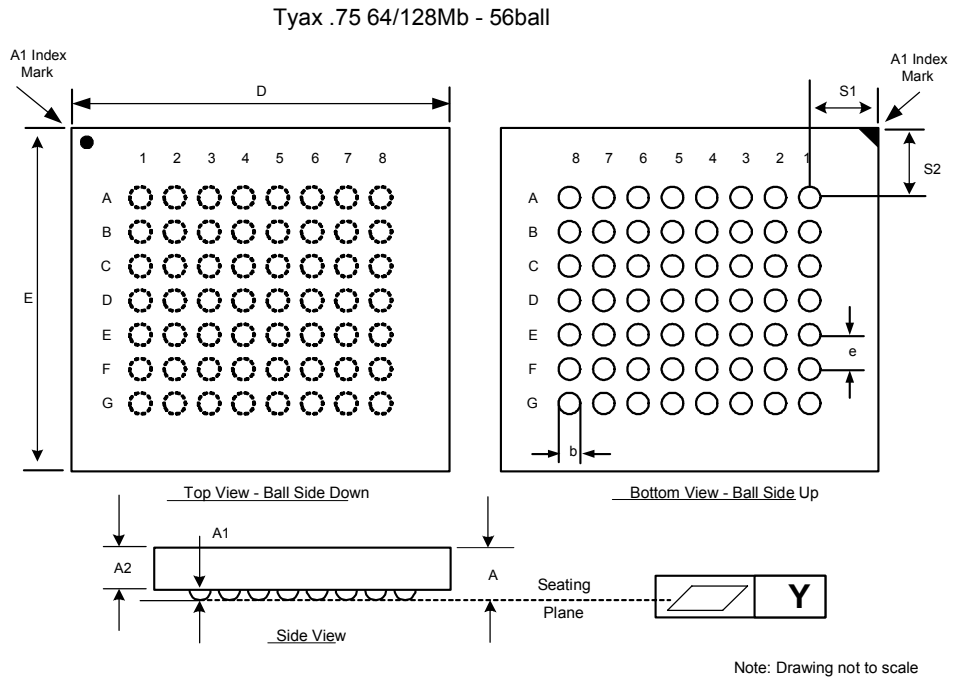

		Millimeters				Inches		
Dimensions	**Symbol**	**Min**	**Nom**	**Max**	**Notes**	**Min**	**Nom**	**Max**
Package Height	A			1.000				0.0394
Ball Height	A1	0.150				0.0059		
Package Body Thickness	A2		0.665				0.0262	
Ball (Lead) Width	b	0.325	0.375	0.425		0.0128	0.0148	0.0167
Package Body Length (128Mb)	D	7.600	7.700	7.800		0.2992	0.3031	0.3071
Package Body Width (128Mb)	E	8.900	9.000	9.100		0.3504	0.3543	0.3583
Pitch	e		0.750				0.0295	
Ball (Lead) Count	N		56				56	
Seating Plane Coplanarity	Y			0.100				0.0039
Corner to Ball A1 Distance Along D	S1	1.125	1.225	1.325		0.0443	0.0482	0.0522
Corner to Ball A1 Distance Along E	S2	2.150	2.250	2.350		0.0846	0.0886	0.0925

Downloaded from Arrow.com.

Figure 2: 256-Mbit, 79-Ball VF BGA Package Drawing and Dimensions

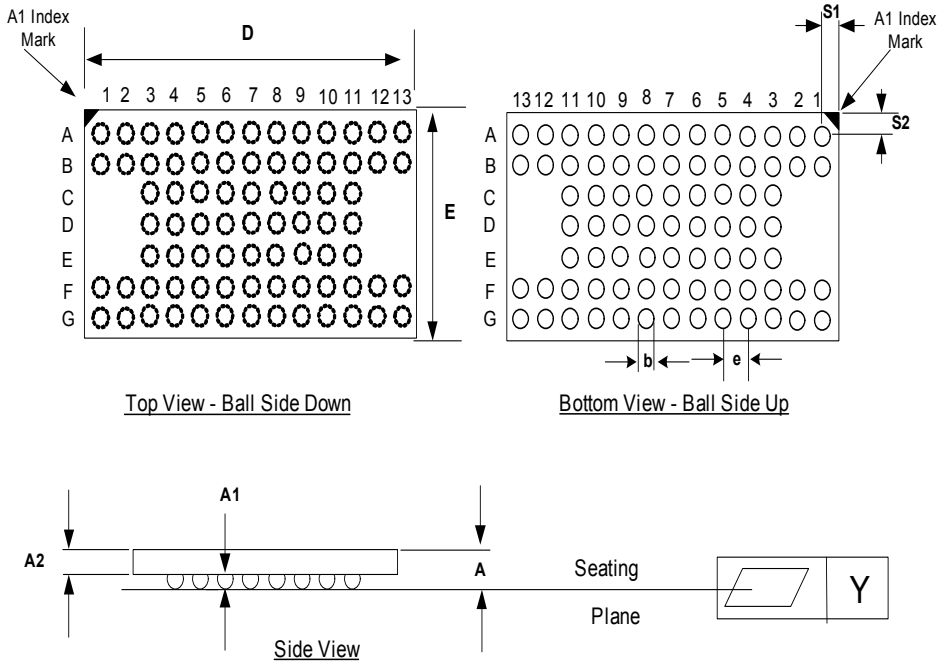

Drawing not to scale

Dimensions Table

		Millimeters				Inches		
Dimensions	**Symbol**	**Min**	**Nom**	**Max**	**Notes**	**Min**	**Nom**	**Max**
Package Height	A			1.000				0.0394
Ball Height	A1	0.150				0.0059		
Package Body Thickness	A2		0.665				0.0262	
Ball (Lead) Width	b	0.325	0.375	0.425		0.0128	0.0148	0.0167
Package Body Length (256Mb)	D	10.900	11.000	11.100		0.4291	0.4331	0.4370
Package Body Width (256Mb)	E	8.900	9.000	9.100		0.3504	0.3543	0.3583
Pitch	e		0.750				0.0295	
Ball (Lead) Count	N		79				79	
Seating Plane Coplanarity	Y			0.100				0.0039
Corner to Ball A1 Distance Along D	S1	0.900	1.000	1.100		0.0354	0.0394	0.0433
Corner to Ball A1 Distance Along E	S2	2.150	2.250	2.350		0.0846	0.0886	0.0925

Downloaded from Arrow.com.

3.2 SCSP Packages

Figure 3: 128-Mbit, 88-ball (80-active ball) SCSP Drawing and Dimensions (8x10x1.2 mm)

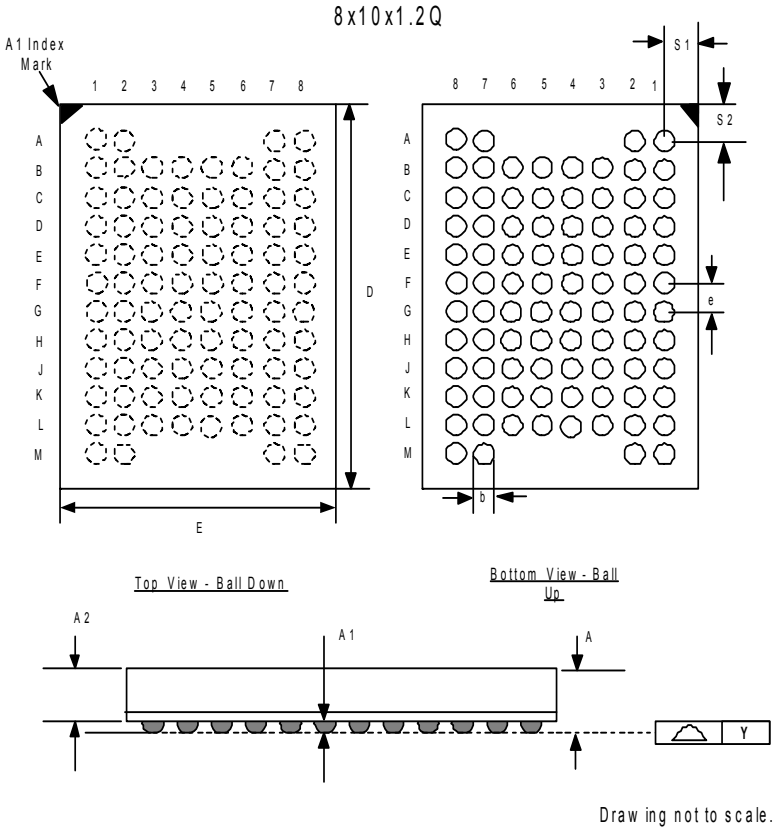

		Millimeters				Inches		
Dimensions	**Symbol**	**Min**	**Nom**	**Max**	**Notes**	**Min**	**Nom**	**Max**
Package Height	A			1.200				0.0472
Ball Height	A1	0.200				0.0079		
Package Body Thickness	A2		0.860				0.0339	
Ball (Lead) Width	b	0.325	0.375	0.425		0.0128	0.0148	0.0167
Package Body Length	D	9.900	10.000	10.100		0.3898	0.3937	0.3976
Package Body Width	E	7.900	8.000	8.100		0.3110	0.3150	0.3189
Pitch	e		0.800				0.0315	
Ball (Lead) Count	N		88				88	
Seating Plane Coplanarity	Y			0.100				0.0039
Corner to Ball A1 Distance Along E	S1	1.100	1.200	1.300		0.0433	0.0472	0.0512
Corner to Ball A1 Distance Along D	S2	0.500	0.600	0.700		0.0197	0.0236	0.0276

Downloaded from Arrow.com.

Figure 4: 256-Mbit, 88-ball (80-active ball) SCSP Drawing and Dimensions (8x11x1.0 mm)

UT 8x11x1.0Q

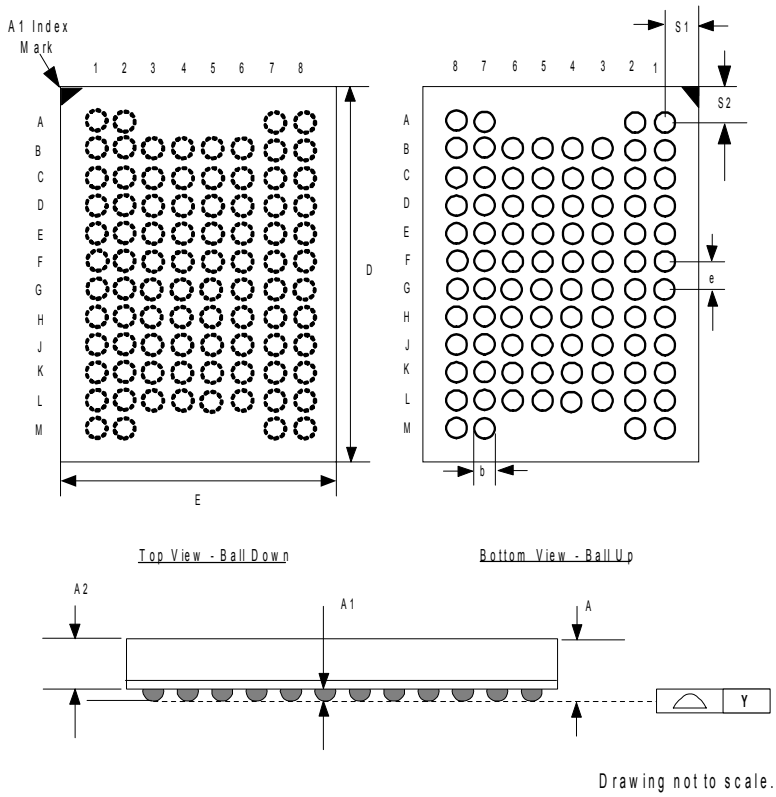

Note: Dimensions A1, A2, and b are preliminary

		Millimeters				Inches		
Dimensions	**Symbol**	**Min**	**Nom**	**Max**	**Notes**	**Min**	**Nom**	**Max**
Package Height	A			1.00				0.0394
Ball Height	A1	0.117				0.0046		
Package Body Thickness	A2		0.740				0.0291	
Ball (Lead) Width	b	0.300	0.350	0.400		0.0118	0.0138	0.0157
Package Body Length	D	10.900	11.00	11.100		0.4291	0.4331	0.4370
Package Body Width	E	7.900	8.00	8.100		0.3110	0.3150	0.3189
Pitch	e		0.80				0.0315	
Ball (Lead) Count	N		88				88	
Seating Plane Coplanarity	Y			0.100				0.0039
Corner to Ball A1 Distance Along E	S1	1.100	1.200	1.300		0.0433	0.0472	0.0512
Corner to Ball A1 Distance Along D	S2	1.000	1.100	1.200		0.0394	0.0433	0.0472

Downloaded from Arrow.com.

4.0 Ballout and Signal Descriptions

4.1 Signal Ballout

This section includes signal ballouts for the following packages:

- VF BGA Package Ballout
- SCSP Package Ballout

4.1.1 VF BGA Package Ballout

The Numonyx™ StrataFlash® Wireless Memory (L30) is available in a VF BGA package with 0.75 mm ball-pitch. Figure 5 shows the ballout for the 128-Mbit device in the 56-ball VF BGA package with a 7x8 active-ball matrix. Figure 6 shows the device ballout for the 256-Mbit device in the 63-ball VF BGA package with a 7x9 active-ball matrix. Both package densities are ideal for space-constrained board applications

Figure 5: 7x8 Active-Ball Matrix for 128-Mbit Density in VF BGA Packages

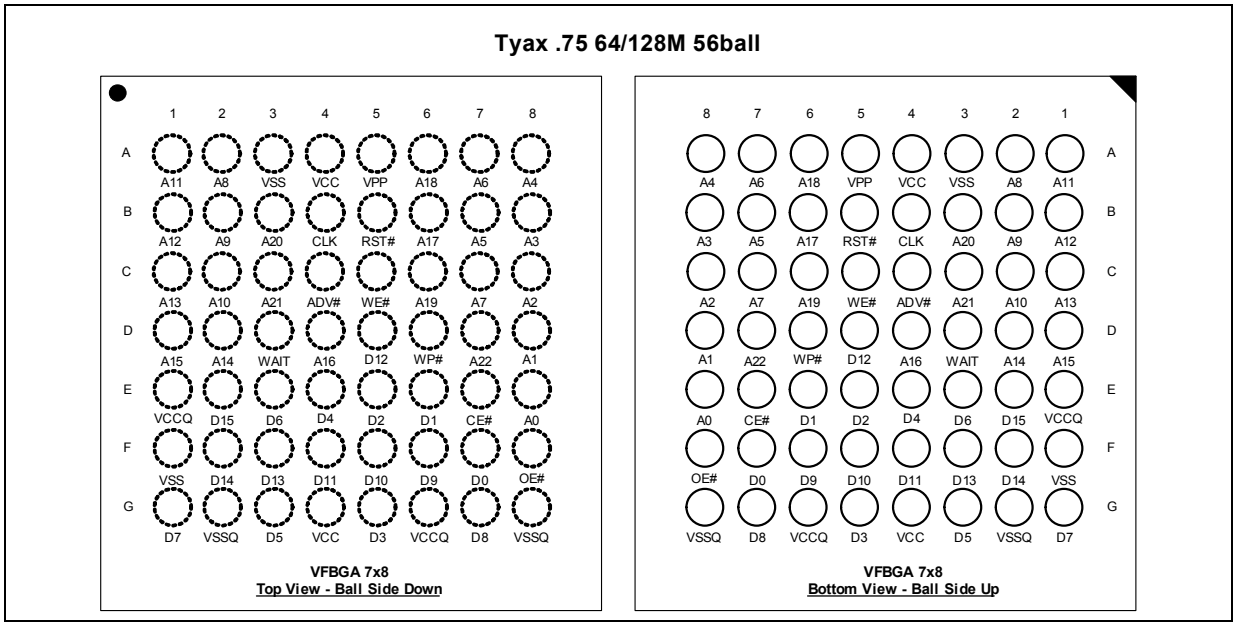

Downloaded from Arrow.com.

Figure 6: 7x9 Active-Ball Matrix for 256-Mbit Density in VF BGA Package

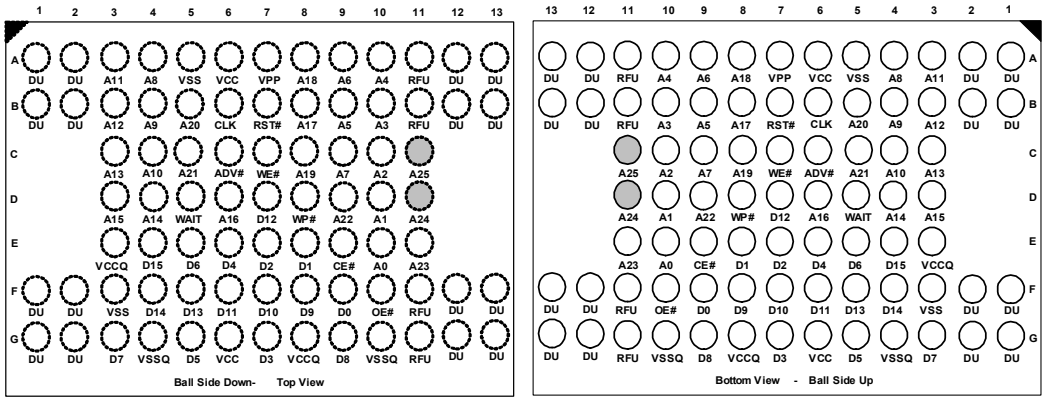

Note: On lower density devices upper address balls can be treated as RFU's. (A24 is for 512Mb and A25 is for 1Gb densities). All ball locations are populated.

Note: On lower density devices upper address balls can be treated as RFUs. (A24 is for 512-Mbit and A25 is for 1-Gbit densities). All ball locations are populated.

Downloaded from Arrow.com.

4.1.2 SCSP Package Ballout

The L30 wireless memory in QUAD+ ballout device is available in an 88-ball (80-active ball) Stacked Chip Scale Package (SCSP) for the 128- and 256-Mbit devices. For Mechanical Information, refer to Section 3.0, "Package Information" on page 10.

Figure 7: 88-Ball (80-Active Ball) SCSP Package Ballout

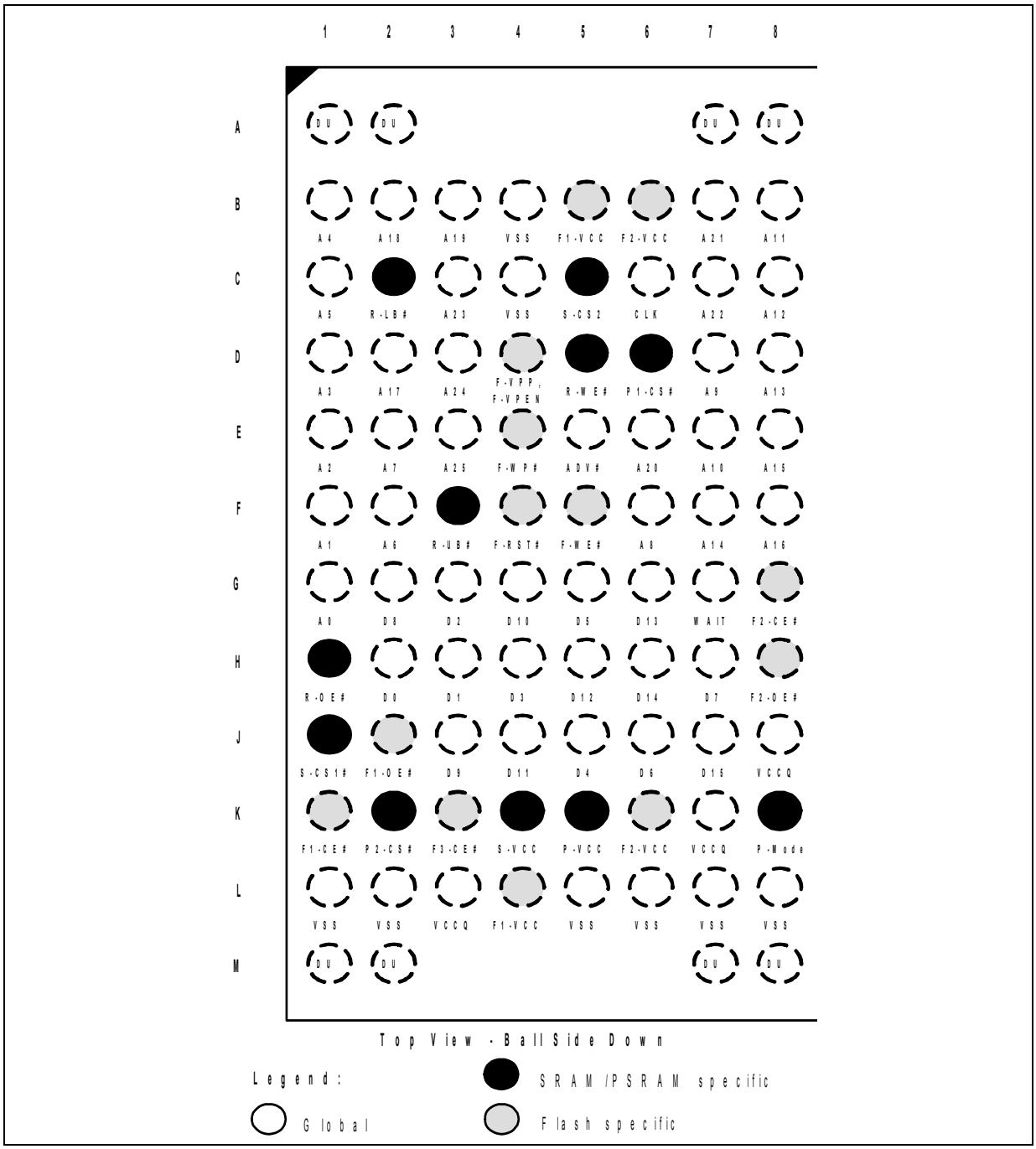

Downloaded from Arrow.com.

4.2 Signal Descriptions

This section includes signal descriptions for the following packages:

- VF BGA Package Signal Descriptions
- SCSP Package Signal Descriptions

Table 1: Signal Descriptions for VF BGA Package (Sheet 1 of 2)

Symbol	Type	Name and Function
A[MAX:0]	Input	**ADDRESS:** Device address inputs. 128-Mbit: A[22:0]; 256-Mbit: A[23:0].
DQ[15:0]	Input/ Output	**DATA INPUT/OUTPUTS:** Inputs data and commands during write cycles; outputs data during memory, Status Register, Protection Register, and Read Configuration Register reads. Data balls float when the CE# or OE# are deasserted. Data is internally latched during writes.
ADV#	Input	**ADDRESS VALID:** Active-low input. During synchronous read operations, addresses are latched on the rising edge of ADV#, or on the next valid CLK edge with ADV# low, whichever occurs first. In asynchronous mode, the address is latched when ADV# going high or continuously flows through if ADV# is held low.
CE#	Input	**CHIP ENABLE:** Active-low input. CE#-low selects the device. CE#-high deselects the device, placing it in standby, with DQ[15:0] and WAIT in High-Z.
CLK	Input	**CLOCK:** Synchronizes the device with the system's bus frequency in synchronous-read mode and increments the internal address generator. During synchronous read operations, addresses are latched on the rising edge of ADV#, or on the next valid CLK edge with ADV# low, whichever occurs first.
OE#	Input	**OUTPUT ENABLE:** Active-low input. OE#-low enables the device's output data buffers during read cycles. OE#-high places the data outputs in High-Z and WAIT in High-Z.
RST#	Input	**RESET:** Active-low input. RST# resets internal automation and inhibits write operations. This provides data protection during power transitions. RST#-high enables normal operation. Exit from reset places the device in asynchronous read array mode.
WAIT	Output	**WAIT:** Indicates data valid in synchronous array or non-array burst reads. Configuration Register bit 10 (RCR[10], WT) determines its polarity when asserted. With CE# and OE# at V_{IL}, WAIT's active output is V_{OL} or V_{OH} when CE# and OE# are asserted. WAIT is high-Z if CE# or OE# is V_{IH}. • In synchronous array or non-array read modes, WAIT indicates invalid data when asserted and valid data when deasserted. • During asynchronous reads, WAIT is deasserted. • During writes (when OE# is deasserted), WAIT is tristated.
WE#	Input	**WRITE ENABLE:** Active-low input. WE# controls writes to the device. Address and data are latched on the rising edge of WE#.
WP#	Input	**WRITE PROTECT:** Active-low input. WP#-low enables the lock-down mechanism. Blocks in lock-down cannot be unlocked with the Unlock command. WP#-high overrides the lock-down function enabling blocks to be erased or programmed using software commands.
VPP	Power/ Input	**Erase and Program Power:** A valid voltage on this pin allows erasing or programming. Memory contents cannot be altered when $V_{PP} \leq V_{PPLK}$. Block erase and program at invalid V_{PP} voltages should not be attempted. Set $V_{PP} = V_{CC}$ for in-system program and erase operations. To accommodate resistor or diode drops from the system supply, the V_{IH} level of V_{PP} can be as low as V_{PPL}min. V_{PP} must remain above V_{PPL}min to perform in-system program or erase. VPP may be 0 V during read operations. V_{PPH} can be applied to main blocks for 1000 cycles maximum and to parameter blocks for 2500 cycles maximum. VPP can be connected to V_{PPH} for a cumulative total not to exceed 80 hours. Extended use of this pin at V_{PPH} may derate flash performance/behavior.
VCC	Power	**DEVICE CORE POWER SUPPLY:** Core (logic) source voltage. Writes to the flash array are inhibited when $V_{CC} \leq V_{LKO}$. Operations at invalid V_{CC} voltages should not be attempted.
VCCQ	Power	**OUTPUT POWER SUPPLY:** Output-driver source voltage.
VSS	Power	**Ground:** Ground reference for device logic voltages. Connect to system ground.
VSSQ	Power	**Ground:** Ground reference for device output voltages. Connect to system ground.

Downloaded from Arrow.com.

Table 1: Signal Descriptions for VF BGA Package (Sheet 2 of 2)

Symbol	Type	Name and Function
DU	—	**Do Not Use:** Do not use this ball. This ball should not be connected to any power supplies, signals or other balls, and must be left floating.
NC	—	**No Connect:** No internal connection; can be driven or floated.
RFU	—	**Reserved for Future Use:** Reserved by Numonyx for future device functionality and enhancement.

Table 2: Device Signal Descriptions for 128/0 and 256/0 SCSP (Sheet 1 of 2)

Symbol	Type	Description
A[Max:0]	Input	ADDRESS INPUTS: Inputs for all die addresses during read and write operations. • 128-Mbit Die: A[Max] = A22 • 256-Mbit Die: A[Max] = A23
DQ[15:0]	Input/ Output	**DATA INPUTS/OUTPUTS:** Inputs data and commands during write cycles, outputs data during read cycles. Data signals float when the device or its outputs are deselected. Data is internally latched during writes.
F1-CE# F2-CE# F3-CE#	Input	**FLASH CHIP ENABLE:** Low-true: selects the associated flash memory die. When asserted, flash internal control logic, input buffers, decoders, and sense amplifiers are active. When deasserted, the associated flash die is deselected, power is reduced to standby levels, data and WAIT outputs are placed in high-Z state. F1-CE# selects the flash die. F2-CE# and F3-CE# are available on stacked combinations with two or three flash dies else they are RFU. They each can be tied high to VCCQ through a 10K-ohm resistor for future design flexibility.
S-CS1# S-CS2	Input	**SRAM CHIP SELECTS:** When both SRAM chip selects are asserted, SRAM internal control logic, input buffers, decoders, and sense amplifiers are active. When either/both SRAM chip selects are deasserted (S-CS1# = VIH or S-CS2 = VIL), the SRAM is deselected and its power is reduced to standby levels. Treat this signal as NC (No Connect) for this device.
P-CS#	Input	**PSRAM CHIP SELECT:** Low-true; when asserted, PSRAM internal control logic, input buffers, decoders, and sense amplifiers are active. When deasserted, the PSRAM is deselected and its power is reduced to standby levels. Treat this signal as NC (No Connect) for this device.
F1-OE# F2-OE#	Input	**FLASH OUTPUT ENABLE:** Low-true; OE#-low enables the flash output buffers. OE#-high disables the flash output buffers, and places the flash outputs in High-Z. F2-OE# is available on stacked combinations with two or three flash dies else it is RFU. It can be pulled high to VCCQ through a 10K-ohm resistor for future design flexibility.
R-OE#	Input	**RAM OUTPUT ENABLE:** Low-true; R-OE#-low enables the selected RAM output buffers. R-OE#-high disables the RAM output buffers, and places the selected RAM outputs in High-Z. Treat this signal as NC (No Connect) for this device.
WE#	Input	**FLASH WRITE ENABLE:** Low-true; WE# controls writes to the selected flash die. Address and data are latched on the rising edge of WE#.
R-WE#	Input	**RAM WRITE ENABLE:** Low-true; R-WE# controls writes to the selected RAM die. Treat this signal as NC (No Connect) for this device.
CLK	Input	**FLASH CLOCK:** Synchronizes the device with the system's bus frequency in synchronous-read mode and increments the internal address generator. During synchronous read operations, addresses are latched on the rising edge of ADV#, or on the next valid CLK edge with ADV# low, whichever occurs first.
WAIT	Output	**FLASH WAIT:** Indicates data valid in synchronous array or non-array burst reads. Configuration Register bit 10 (RCR[10], WT) determines its polarity when asserted. With CE# and OE# at V_{IL}, WAIT's active output is V_{OL} or V_{OH} when CE# and OE# are asserted. WAIT is high-Z if CE# or OE# is V_{IH}. • In synchronous array or non-array read modes, WAIT indicates invalid data when asserted and valid data when deasserted. • In asynchronous page mode, and all write modes, WAIT is deasserted.

Downloaded from Arrow.com.

Table 2: Device Signal Descriptions for 128/0 and 256/0 SCSP (Sheet 2 of 2)

WP#	Input	**FLASH WRITE PROTECT:** Low-true; WP# enables/disables the lock-down protection mechanism of the selected flash die. WP#-low enables the lock-down mechanism - locked down blocks cannot be unlocked with software commands. WP#-high disables the lock-down mechanism, allowing locked down blocks to be unlocked with software commands.
ADV#	Input	**FLASH ADDRESS VALID:** Active-low input. During synchronous read operations, addresses are latched on the rising edge of ADV#, or on the next valid CLK edge with ADV# low, whichever occurs first. In asynchronous mode, the address is latched when ADV# going high or continuously flows through if ADV# is held low.
R-UB# R-LB#	Input	**RAM UPPER / LOWER BYTE ENABLES:** Low-true; During RAM reads, R-UB#-low enables the RAM high order bytes on DQ[15:8], and R-LB#-low enables the RAM low-order bytes on DQ[7:0]. Treat this signal as NC (No Connect) for this device.
RST#	Input	**FLASH RESET:** Low-true; RST#-low initializes flash internal circuitry and disables flash operations. RST#-high enables flash operation. Exit from reset places the flash in asynchronous read array mode.
P-Mode	Input	**PSRAM MODE:** Low-true; P-MODE is used to program the configuration register, and enter/exit low power mode. Treat this signal as NC (No Connect) for this device.
VPP, VPEN	Power/ Input	**FLASH PROGRAM / ERASE POWER:** A valid voltage on this pin allows erasing or programming. Memory contents cannot be altered when $V_{PP} \leq V_{PPLK}$. Block erase and program at invalid V_{PP} voltages should not be attempted. Set $V_{PP} = V_{CC}$ for in-system program and erase operations. To accommodate resistor or diode drops from the system supply, the V_{IH} level of V_{PP} can be as low as V_{PPL}min. V_{PP} must remain above V_{PPL}min to perform in-system flash modification. VPP may be 0 V during read operations. V_{PPH} can be applied to main blocks for 1000 cycles maximum and to parameter blocks for 2500 cycles maximum. VPP can be connected to V_{PPH} for a cumulative total not to exceed 80 hours. Extended use of this pin at V_{PPH} may reduce block cycling capability VPEN (Erase/Program/Block Lock Enables) is not available for L30 products.
F1-VCC F2-VCC	Power	**FLASH LOGIC POWER:** F1-VCC supplies power to the core logic of flash die #1; F2-VCC supplies power to the core logic of flash die #2. Write operations are inhibited when $V_{CC} \leq V_{LKO}$. Device operations at invalid V_{CC} voltages should not be attempted.
S-VCC	Power	**SRAM Power Supply:** Supplies power for SRAM operations. Treat this signal as NC (No Connect) for this device.
P-VCC	Power	**PSRAM Power SUpply:** Supplies power for PSRAM operations. Treat this signal as NC (No Connect) for this device.
VCCQ	Power	**Flash I/O Power:** Supply power for the input and output buffers.
VSS	Power	**Ground:** Connect to system ground. Do not float any VSS connection.
RFU	—	**Reserved for Future Use:** Reserve for future device functionality/ enhancements. Contact Numonyx regarding their future use.
DU	—	**Do Not Use:** Do not connect to any other signal, or power supply; must be left floating.
NC	—	**No Connect:** No internal connection; can be driven or floated.

4.3 Memory Map

See Table 3, "Top Parameter Memory Map, 128-Mbit" on page 20 and Table 5, "Bottom Parameter Memory Map, 128-Mbit" on page 21. The memory array is divided into multiple partitions; one parameter partition and several main partitions:

- 128-Mbit device. This contains sixteen partitions: one 8-Mbit parameter partition, fifteen 8-Mbit main partitions.
- 256-Mbit device. This contains sixteen partitions: one 16-Mbit parameter partition, fifteen 16-Mbit main partitions.

Downloaded from Arrow.com.

Table 3: Top Parameter Memory Map, 128-Mbit

		Size (KW)	Blk	128-Mbit
8-Mbit Parameter Partition	One Partition	16	130	7FC000-7FFFFF
		16	129	7F8000-7FBFFF
		16	128	7F4000-7F7FFF
		16	127	7F0000-7F3FFF
		64	126	7E0000-7EFFFF
		⋮	⋮	⋮
		64	120	780000-78FFFF
8-Mbit Main Partitions	Fifteen Partitions	64	119	770000-77FFFF
		⋮		
		64	0	000000-00FFFF

Table 4: Top Parameter Memory Map, 256-Mbit

		Size (KW)	Blk	256-Mbit
16-Mbit Parameter Partition	One Partition	16	258	FFC000-FFFFFF
		16	257	FF8000-FFBFFF
		16	256	FF4000-FF7FFF
		16	255	FF0000-FF3FFF
		64	254	FE0000-FEFFFF
		⋮	⋮	⋮
		64	240	F00000-FFFFFF
16-Mbit Main Partitions	Seven Partitions	64	239	EF0000-EFFFFF
		⋮		
		64	128	800000-80FFFF
	Eight Partitions	64	127	7F0000-7FFFFF
		⋮		
		64	0	000000-00FFFF

Downloaded from Arrow.com.

Table 5: Bottom Parameter Memory Map, 128-Mbit

		Size (KW)	Blk	128-Mbit
8-Mbit Main Partitions	Fifteen Partitions	64	130	7F0000-7FFFFF
		⋮	⋮	⋮
		64	11	080000-08FFFF
8-Mbit Parameter Partition	One Partition	64	10	070000-07FFFF
		⋮	⋮	⋮
		64	4	010000-01FFFF
		16	3	00C000-00FFFF
		16	2	008000-00BFFF
		16	1	004000-007FFF
		16	0	000000-003FFF

Table 6: Bottom Parameter Memory Map, 256-Mbit

		Size (KW)	Blk	256-Mbit
16-Mbit Main Partitions	Eight Partitions	64	258	FF0000-FFFFFF
		⋮	⋮	⋮
		64	131	800000-80FFFF
	Seven Partitions	64	130	7F0000-7FFFFF
		⋮	⋮	⋮
		64	19	100000-10FFFF
16-Mbit Parameter Partition	One Partition	64	18	0F0000-0FFFFF
		⋮	⋮	⋮
		64	4	010000-01FFFF
		16	3	00C000-00FFFF
		16	2	008000-00BFFF
		16	1	004000-007FFF
		16	0	000000-003FFF

Downloaded from Arrow.com.

5.0 Maximum Ratings and Operating Conditions

5.1 Absolute Maximum Ratings

Warning: Stressing the device beyond the "Absolute Maximum Ratings" may cause permanent damage. These are stress ratings only. Operation beyond the "Operating Conditions" is not recommended and extended exposure beyond the "Operating Conditions" may affect device reliability.

Table 7: Absolute Maximum Ratings Table

Parameter	Maximum Rating	Notes
Temperature under bias	–25 °C to +85 °C	
Storage temperature	–65 °C to +125 °C	
Voltage on any signal (except V_{CC}, VPP)	–0.5 V to +3.8 V	1
VPP voltage	–0.2 V to +10 V	1,2,3
VCC voltage	–0.2 V to +2.5 V	1
VCCQ voltage	–0.2 V to +3.8 V	1
Output short circuit current	100 mA	4

Notes:
1. Voltages shown are specified with respect to V_{SS}. Minimum DC voltage is –0.5 V on input/output signals and –0.2 V on V_{CC}, V_{CCQ}, and V_{PP}. During transitions, this level may undershoot to –2.0 V for periods < 20 ns. Maximum DC voltage on V_{CC} is V_{CC} +0.5 V, which, during transitions, may overshoot to V_{CC} +2.0 V for periods < 20 ns. Maximum DC voltage on input/output signals and V_{CCQ} is V_{CCQ} +0.5 V, which, during transitions, may overshoot to V_{CCQ} +2.0 V for periods < 20 ns.
2. Maximum DC voltage on V_{PP} may overshoot to +14.0 V for periods < 20 ns.
3. Program/erase voltage is typically 1.7 V – 2.0 V. 9.0 V can be applied for 80 hours maximum total, to main blocks for 1000 cycles maximum and to parameter blocks for 2500 cycles maximum. 9.0 V program/erase voltage may reduce block cycling capability.
4. Output shorted for no more than one second. No more than one output shorted at a time.

5.2 Operating Conditions

Table 8: Operating Conditions Table

Symbol	Parameter		Min	Max	Units	Notes
T_C	Operating Temperature		–25	+85	°C	1
V_{CC}	V_{CC} Supply Voltage		1.7	2.0	V	
V_{CCQ}	I/O Supply Voltage		2.2	3.3		
V_{PPL}	V_{PP} Voltage Supply (Logic Level)		0.9	3.3		2
V_{PPH}	Factory word programming V_{PP}		8.5	9.5		
t_{PPH}	Maximum V_{PP} Hours	$V_{PP} = V_{PPH}$	-	80	Hours	
Block Erase Cycles	Main and Parameter Blocks	$V_{PP} = V_{CC}$	100,000	-	Cycles	
	Main Blocks	$V_{PP} = V_{PPH}$	-	1000		
	Parameter Blocks	$V_{PP} = V_{PPH}$	-	2500		

Notes:
1. T_C = Case Temperature
2. In typical operation, the VPP program voltage is VPPL. VPP can be connected to 8.5 V – 9.5 V for 1000 cycles on main blocks and 2500 cycles on parameter blocks.

Downloaded from Arrow.com.

6.0 Electrical Specifications

6.1 DC Current Characteristics

Table 9: CD Current Specifications (Sheet 1 of 2)

Sym	Parameter		V_{CC} / V_{CCQ}	1.7 V – 2.0 V / 2.2 V – 3.3 V Typ	Max	Unit	Test Conditions	Notes
I_{LI}	Input Load Current			-	±2	µA	$V_{CC} = V_{CC}Max$ $V_{CCQ} = V_{CCQ}Max$ $V_{IN} = V_{CCQ}$ or GND	1
I_{LO}	Output Leakage Current	DQ[15:0], WAIT		-	±10	µA	$V_{CC} = V_{CC}Max$ $V_{CCQ} = V_{CCQ}Max$ $V_{IN} = V_{CCQ}$ or GND	1
I_{CCS} I_{CCD}	V_{CC} Standby, Power Down		128-Mbit	25	75	µA	$V_{CC} = V_{CC}Max$ $V_{CCQ} = V_{CCQ}Max$ CE# = V_{CCQ} RST# = V_{CCQ} (for I_{CCS}) RST# = GND (for I_{CCD}) WP# = V_{IH}	1,2
			256-Mbit	30	115			
I_{CCAPS}	APS		128-Mbit	25	75	µA	$V_{CC} = V_{CC}Max$ $V_{CCQ} = V_{CCQ}Max$ CE# = V_{SSQ} RST# = V_{CCQ} All inputs are at rail to rail (V_{CCQ} or V_{SSQ}).	1,2
			256-Mbit	30	115			
I_{CCR}	Average V_{CC} Read Current	Asynchronous Single-Word f = 5MHz (1 CLK)		14	16	mA	$V_{CC} = V_{CC}Max$ CE# = V_{IL} OE# = V_{IH} Inputs: V_{IL} or V_{IH}	1
		Page-Mode Read f = 13 MHz (5 CLK)		9	10	mA	4-Word Read	
		Synchronous Burst Read f = 40MHz		13	17	mA	Burst length = 4	
				15	19	mA	Burst length = 8	
				17	21	mA	Burst length = 16	
				21	26	mA	Burst length = Continuous	
		Synchronous Burst Read f = 52MHz		16	19	mA	Burst length = 4	
				19	23	mA	Burst length = 8	
				22	26	mA	Burst length = 16	
				23	28	mA	Burst Length = Continuous	
I_{CCW}, I_{CCE}	V_{CC} Program Current, V_{CC} Erase Current			36	51	mA	$V_{PP} = V_{PPL}$, program/erase in progress	1,3,4,7
				26	33	mA	$V_{PP} = V_{PPH}$, program/erase in progress	1,3,5,7
I_{CCWS}, I_{CCES}	V_{CC} Program Suspend Current, V_{CC} Erase Suspend Current		128-Mbit	25	75	µA	CE# = V_{CCQ}; suspend in progress	1,6,3
			256-Mbit	30	115			
I_{PPS}, I_{PPWS}, I_{PPES}	V_{PP} Standby Current, V_{PP} Program Suspend Current, V_{PP} Erase Suspend Current			0.2	5	µA	$V_{PP} = V_{PPL}$, suspend in progress	1,3

Downloaded from Arrow.com.

Table 9: CD Current Specifications (Sheet 2 of 2)

Sym	Parameter	V_{CC}	1.7 V – 2.0 V		Unit	Test Conditions	Notes
		V_{CCQ}	2.2 V – 3.3 V				
			Typ	Max			
I_{PPR}	V_{PP} Read		2	15	µA	$V_{PP} \le V_{CC}$	1,3
I_{PPW}	V_{PP} Program Current		0.05	0.10	mA	$V_{PP} = V_{PPL}$, program in progress	
			8	22		$V_{PP} = V_{PPH}$, program in progress	
I_{PPE}	V_{PP} Erase Current		0.05	0.10	mA	$V_{PP} = V_{PPL}$, erase in progress	
			8	22		$V_{PP} = V_{PPH}$, erase in progress	

Notes:
1. All currents are RMS unless noted. Typical values at typical V_{CC}, T_C = +25°C.
2. I_{CCS} is the average current measured over any 5 ms time interval 5 µs after CE# is deasserted.
3. Sampled, not 100% tested.
4. V_{CC} read + program current is the sum of V_{CC} read and V_{CC} program currents.
5. V_{CC} read + erase current is the sum of V_{CC} read and V_{CC} erase currents.
6. I_{CCES} is specified with the device deselected. If device is read while in erase suspend, current is I_{CCES} plus I_{CCR}.
7. I_{CCW}, I_{CCE} measured over typical or max times specified in Section 7.6, "Program and Erase Characteristics" on page 36

6.2 DC Voltage Characteristics

Table 10: CD Voltage Specifications

Sym	Parameter	V_{CC}	1.7 V – 2.0 V		Unit	Test Condition	Notes
		V_{CCQ}	2.2 V – 3.3 V				
			Min	Max			
V_{IL}	Input Low Voltage		0	0.4	V		1
V_{IH}	Input High Voltage		V_{CCQ} – 0.4	V_{CCQ}	V		1
V_{OL}	Output Low Voltage		-	0.1	V	$V_{CC} = V_{CC}$Min $V_{CCQ} = V_{CCQ}$Min I_{OL} = 100 µA	
V_{OH}	Output High Voltage		V_{CCQ} – 0.1	-	V	$V_{CC} = V_{CC}$Min $V_{CCQ} = V_{CCQ}$Min I_{OH} = –100 µA	
V_{PPLK}	V_{PP} Lock-Out Voltage		-	0.4	V		2
V_{LKO}	V_{CC} Lock Voltage		1.0	-	V		
V_{LKOQ}	V_{CCQ} Lock Voltage		0.9	-	V		

Notes:
1. V_{IL} can undershoot to –0.4 V and V_{IH} can overshoot to V_{CCQ} + 0.4 V for durations of 20 ns or less.
2. $V_{PP} \le V_{PPLK}$ inhibits erase and program operations. Do not use V_{PPL} and V_{PPH} outside their valid ranges.

Downloaded from Arrow.com.

7.0 AC Characteristics

7.1 AC Test Conditions

Figure 8: AC Input/Output Reference Waveform

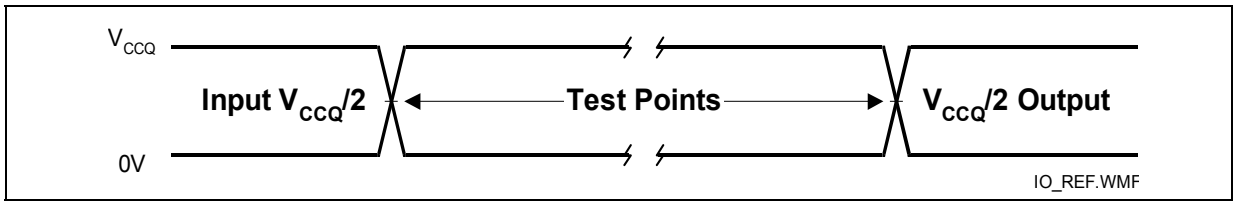

Note: AC test inputs are driven at V_{CCQ} for Logic "1" and 0.0 V for Logic "0." Input/output timing begins/ends at $V_{CCQ}/2$. Input rise and fall times (10% to 90%) < 5 ns. Worst case speed occurs at $V_{CC} = V_{CC}$Min.

Figure 9: Transient Equivalent Testing Load Circuit

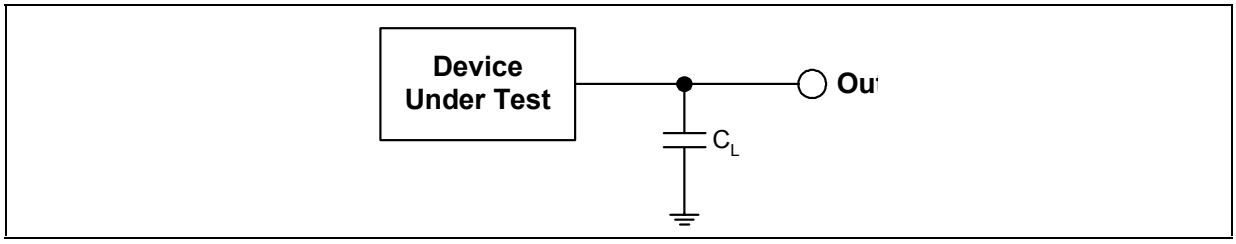

Notes:
1. See the following table for component values.
2. Test configuration component value for worst case speed conditions.
3. C_L includes jig capacitance

Table 11: Test configuration component value for worst case speed conditions

Test Configuration	C_L (pF)
2.0 V Standard Test	30

Figure 10: Clock Input AC Waveform

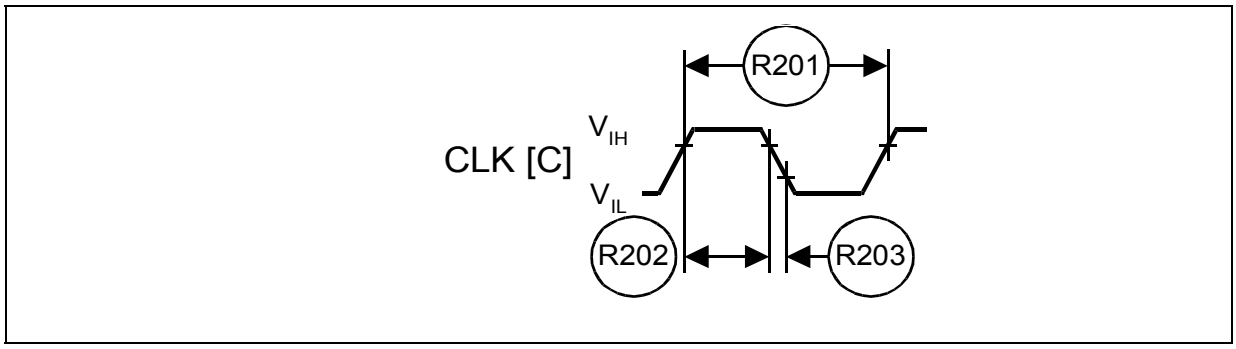

Downloaded from Arrow.com.

7.2 Capacitance

Table 12: Capacitance

Symbol	Parameter	Signals	Min	Typ	Max	Unit	Condition	Note
C_{IN}	Input Capacitance	Address, CE#, WE#, OE#, RST#, CLK, ADV#, WP#	2	6	7	pF	Typ temp= 25 °C, Max temp = 85 °C, V_{CC}=V_{CCQ}=(0-1.95) V, Silicon die	1,2
C_{OUT}	Output Capacitance	Data, WAIT	2	4	5	pF		

Notes:
1. Sampled, not 100% tested.
2. Silicon die capacitance only, add 1 pF for discrete packages.

7.3 AC Read Specifications

Table 13: AC Read Specifications, 128-Mbit (Sheet 1 of 2)

Num	Symbol	Parameter	Speed	–85		Units	Notes
				Min	Max		
Asynchronous Specifications							
R1	t_{AVAV}	Read cycle time		85	-	ns	
R2	t_{AVQV}	Address to output valid		-	85	ns	
R3	t_{ELQV}	CE# low to output valid		-	85	ns	
R4	t_{GLQV}	OE# low to output valid		-	25	ns	1,2
R5	t_{PHQV}	RST# high to output valid		-	150	ns	1
R6	t_{ELQX}	CE# low to output in low-Z		0	-	ns	1,3
R7	t_{GLQX}	OE# low to output in low-Z		0	-	ns	1,2,3
R8	t_{EHQZ}	CE# high to output in high-Z		-	24	ns	1,3
R9	t_{GHQZ}	OE# high to output in high-Z		-	24	ns	
R10	t_{OH}	Output hold from first occurring address, CE#, or OE# change		0	-	ns	
R11	t_{EHEL}	CE# pulse width high		20	-	ns	1
R12	t_{ELTV}	CE# low to WAIT valid		-	16	ns	1
R13	t_{EHTZ}	CE# high to WAIT high Z		-	17	ns	1,3
R15	t_{GLTV}	OE# low to WAIT valid		-	17	ns	1
R16	t_{GLTX}	OE# low to WAIT in low-Z		0	-	ns	1,3
R17	t_{GHTZ}	OE# high to WAIT in high-Z		-	20	ns	1,3
Latching Specifications							
R101	t_{AVVH}	Address setup to ADV# high		10	-	ns	1
R102	t_{ELVH}	CE# low to ADV# high		10	-	ns	
R103	t_{VLQV}	ADV# low to output valid		-	85	ns	
R104	t_{VLVH}	ADV# pulse width low		10	-	ns	
R105	t_{VHVL}	ADV# pulse width high		10	-	ns	
R106	t_{VHAX}	Address hold from ADV# high		9	-	ns	1,4
R108	t_{APA}	Page address access		-	25	ns	1

Downloaded from Arrow.com.

Table 13: AC Read Specifications, 128-Mbit (Sheet 2 of 2)

Num	Symbol	Parameter	Speed	–85 Min	–85 Max	Units	Notes
R111	t_{phvh}	RST# high to ADV# high		30	-	ns	1
Clock Specifications							
R200	f_{CLK}	CLK frequency		-	52	MHz	1,3
R201	t_{CLK}	CLK period		19.2	-	ns	
R202	$t_{CH/CL}$	CLK high/low time		9	-	ns	
R203	$t_{FCLK/RCLK}$	CLK fall/rise time		-	3	ns	
Synchronous Specifications							
R301	$t_{AVCH/L}$	Address setup to CLK		9	-	ns	1
R302	$t_{VLCH/L}$	ADV# low setup to CLK		9	-	ns	
R303	$t_{ELCH/L}$	CE# low setup to CLK		9	-	ns	
R304	t_{CHQV} / t_{CLQV}	CLK to output valid		-	17	ns	
R305	t_{CHQX}	Output hold from CLK		3	-	ns	1,5
R306	t_{CHAX}	Address hold from CLK		10	-	ns	1,4,5
R307	t_{CHTV}	CLK to WAIT valid		-	20	ns	1,5
R311	t_{CHVL}	CLK Valid to ADV# Setup		0	-	ns	1
R312	t_{CHTX}	WAIT Hold from CLK		3	-	ns	1,5

Notes:
1. See Figure 8, "AC Input/Output Reference Waveform" on page 25 for timing measurements and maximum allowable input slew rate.
2. OE# may be delayed by up to $t_{ELQV} - t_{GLQV}$ after CE#'s falling edge without impact to t_{ELQV}.
3. Sampled, not 100% tested.
4. Address hold in synchronous burst mode is t_{CHAX} or t_{VHAX}, whichever timing specification is satisfied first.
5. Applies only to subsequent synchronous reads.

7.4 AC Read Specifications

Table 14: AC Read Specifications, 256-Mbit (Sheet 1 of 2)

Num	Symbol	Parameter	Speed	–85 Min	–85 Max	Units	Notes
Asynchronous Specifications							
R1	t_{AVAV}	Read cycle time	V_{CC} = 1.8 V – 2.0 V	85	-	ns	
			V_{CC} = 1.7 V – 2.0 V	88	-		
R2	t_{AVQV}	Address to output valid	V_{CC} = 1.8 V – 2.0 V	-	85	ns	
			V_{CC} = 1.7 V – 2.0 V	-	88		
R3	t_{ELQV}	CE# low to output valid	V_{CC} = 1.8 V – 2.0 V	-	85	ns	
			V_{CC} = 1.7 V – 2.0 V	-	88		
R4	t_{GLQV}	OE# low to output valid		-	25	ns	1,2
R5	t_{PHQV}	RST# high to output valid		-	150	ns	1
R6	t_{ELQX}	CE# low to output in low-Z		0	-	ns	1,3
R7	t_{GLQX}	OE# low to output in low-Z		0	-	ns	1,2,3

Downloaded from Arrow.com.

Table 14: AC Read Specifications, 256-Mbit (Sheet 2 of 2)

Num	Symbol	Parameter	Speed	–85 Min	–85 Max	Units	Notes
R8	t_{EHQZ}	CE# high to output in high-Z		-	24	ns	1,3
R9	t_{GHQZ}	OE# high to output in high-Z		-	24	ns	
R10	t_{OH}	Output hold from first occurring address, CE#, or OE# change		0	-	ns	
R11	t_{EHEL}	CE# pulse width high		20	-	ns	1
R12	t_{ELTV}	CE# low to WAIT valid		-	16	ns	1
R13	t_{EHTZ}	CE# high to WAIT high Z		-	17	ns	1,3
R15	t_{GLTV}	OE# low to WAIT valid		-	17	ns	1
R16	t_{GLTX}	OE# low to WAIT in low-Z		0	-	ns	1,3
R17	t_{GHTZ}	OE# high to WAIT in high-Z		-	20	ns	1,3
Latching Specifications							
R101	t_{AVVH}	Address setup to ADV# high		10	-	ns	1
R102	t_{ELVH}	CE# low to ADV# high		10	-	ns	
R103	t_{VLQV}	ADV# low to output valid	V_{CC} = 1.8 V – 2.0	-	85	ns	
			V_{CC} = 1.7 V – 2.0	-	88		
R104	t_{VLVH}	ADV# pulse width low		10	-	ns	
R105	t_{VHVL}	ADV# pulse width high		10	-	ns	
R106	t_{VHAX}	Address hold from ADV# high		9	-	ns	1,4
R108	t_{APA}	Page address access		-	25	ns	1
R111	t_{phvh}	RST# high to ADV# high		30	-	ns	1
Clock Specifications							
R200	f_{CLK}	CLK frequency		-	52	MHz	1,3
R201	t_{CLK}	CLK period		19.2	-	ns	
R202	$t_{CH/CL}$	CLK high/low time		9	-	ns	
R203	$t_{FCLK/RCLK}$	CLK fall/rise time		-	3	ns	
Synchronous Specifications							
R301	$t_{AVCH/L}$	Address setup to CLK		9	-	ns	1
R302	$t_{VLCH/L}$	ADV# low setup to CLK		9	-	ns	
R303	$t_{ELCH/L}$	CE# low setup to CLK		9	-	ns	
R304	t_{CHQV} / t_{CLQV}	CLK to output valid		-	17	ns	
R305	t_{CHQX}	Output hold from CLK		3	-	ns	1,5
R306	t_{CHAX}	Address hold from CLK		10	-	ns	1,4,5
R307	t_{CHTV}	CLK to WAIT valid		-	17	ns	1,5
R311	t_{CHVL}	CLK Valid to ADV# Setup		0	-	ns	1
R312	t_{CHTX}	WAIT Hold from CLK		3	-	ns	1,5

Notes:

1. See Figure 8, "AC Input/Output Reference Waveform" on page 25 for timing measurements and max allowable input slew rate.
2. OE# may be delayed by up to t_{ELQV} – t_{GLQV} after CE#'s falling edge without impact to t_{ELQV}.
3. Sampled, not 100% tested.
4. Address hold in synchronous burst mode is t_{CHAX} or t_{VHAX}, whichever timing specification is satisfied first.
5. Applies only to subsequent synchronous reads.

Downloaded from Arrow.com.

I

Figure 11: Asynchronous Single-Word Read (ADV# Low)

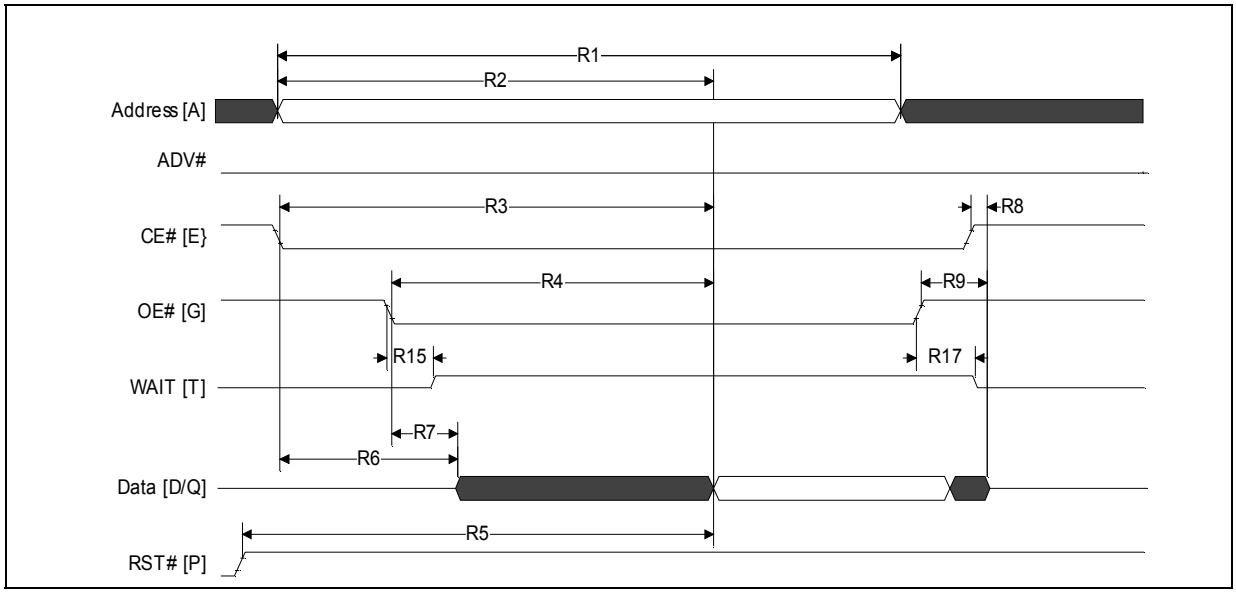

Note: WAIT shown deasserted during asynchronous read mode (RCR[10]=0 Wait asserted low).

Figure 12: Asynchronous Single-Word Read (ADV# Latch)

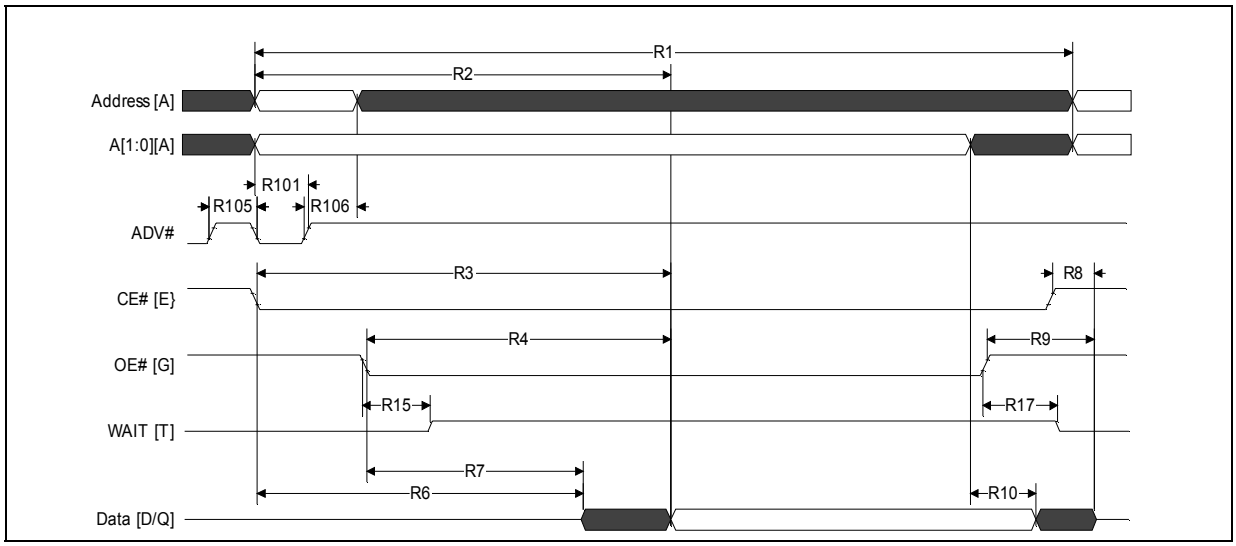

Note: WAIT shown deasserted during asynchronous read mode (RCR[10]=0 Wait asserted low).

Downloaded from Arrow.com.

Figure 13: Asynchronous Page-Mode Read Timing

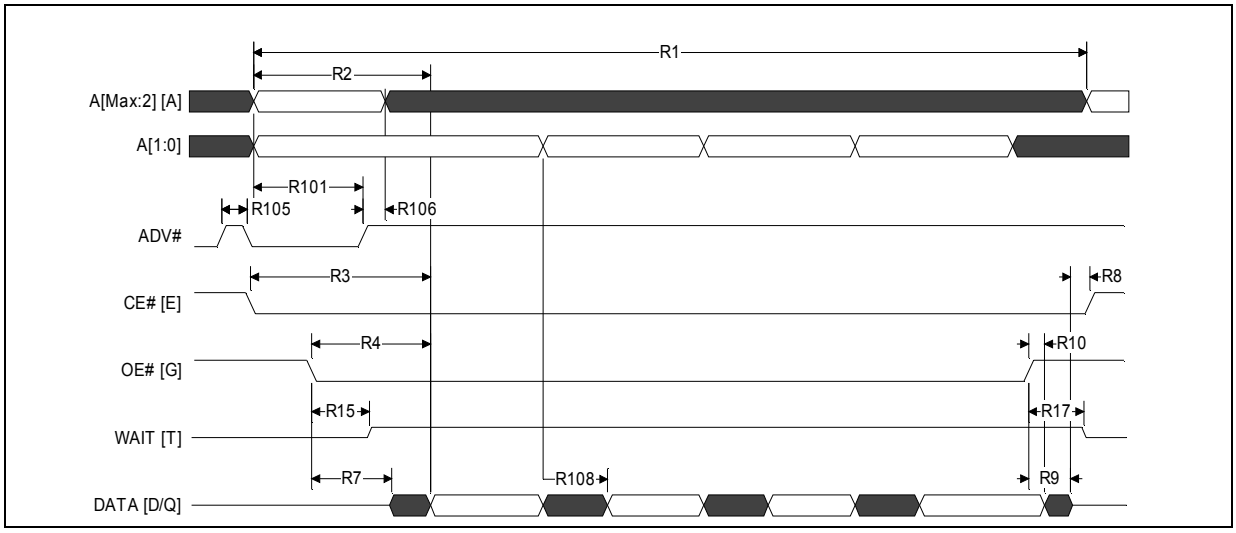

Note: WAIT shown deasserted during asynchronous read mode (RCR[10]=0 Wait asserted low)

Figure 14: Synchronous Single-Word Array or Non-array Read Timing

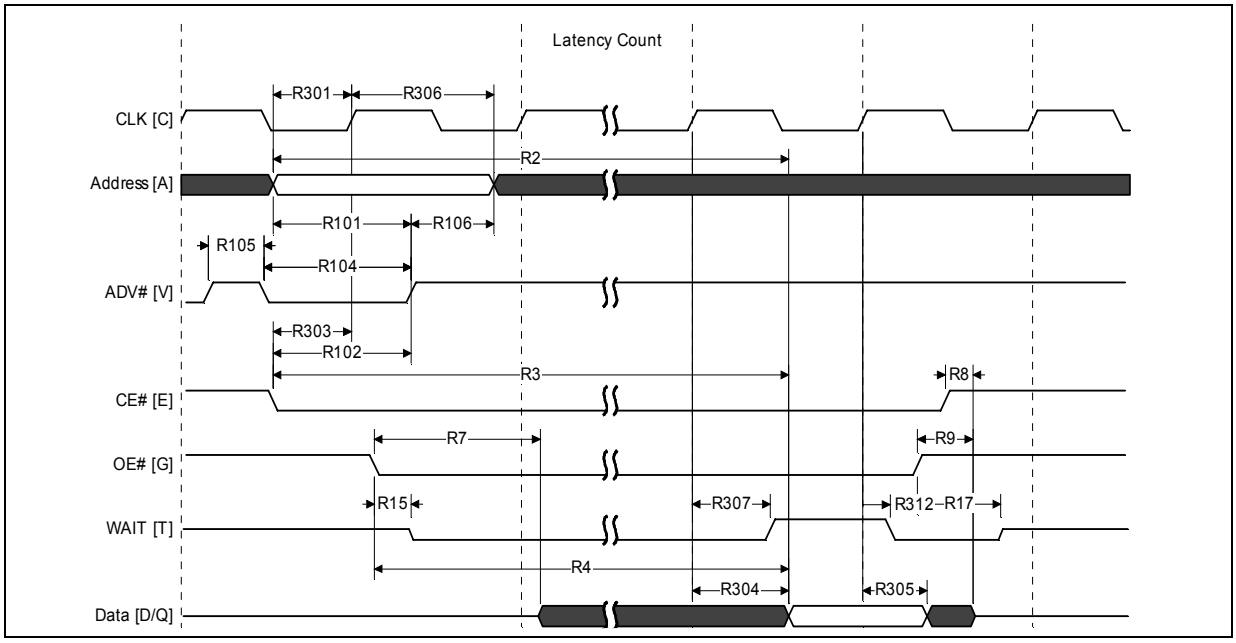

Notes:

1. WAIT is driven per OE# assertion during synchronous array or non-array read, and can be configured to assert either during or one data cycle before valid data.
2. This diagram illustrates the case in which an n-word burst is initiated to the flash memory array and it is terminated by CE# deassertion after the first word in the burst.

Downloaded from Arrow.com.

Figure 15: Continuous Burst Read, showing an Output Delay Timing

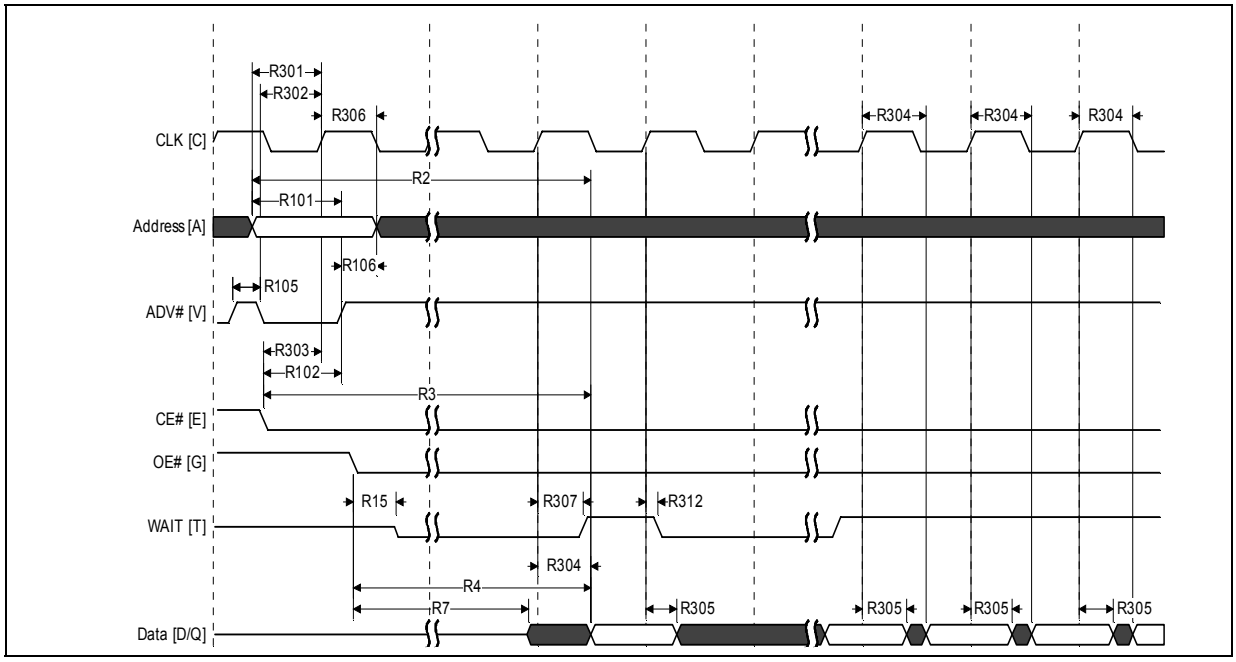

Notes:

1. WAIT is driven per OE# assertion during synchronous array or non-array read. WAIT asserted during initial latency and deasserted during valid data (RCR[10] = 0 Wait asserted low).
2. At the end of Word Line; the delay incurred when a burst access crosses a 16-word boundary and the starting address is not 4-word boundary aligned.

Figure 16: Synchronous Burst-Mode Four-Word Read Timing

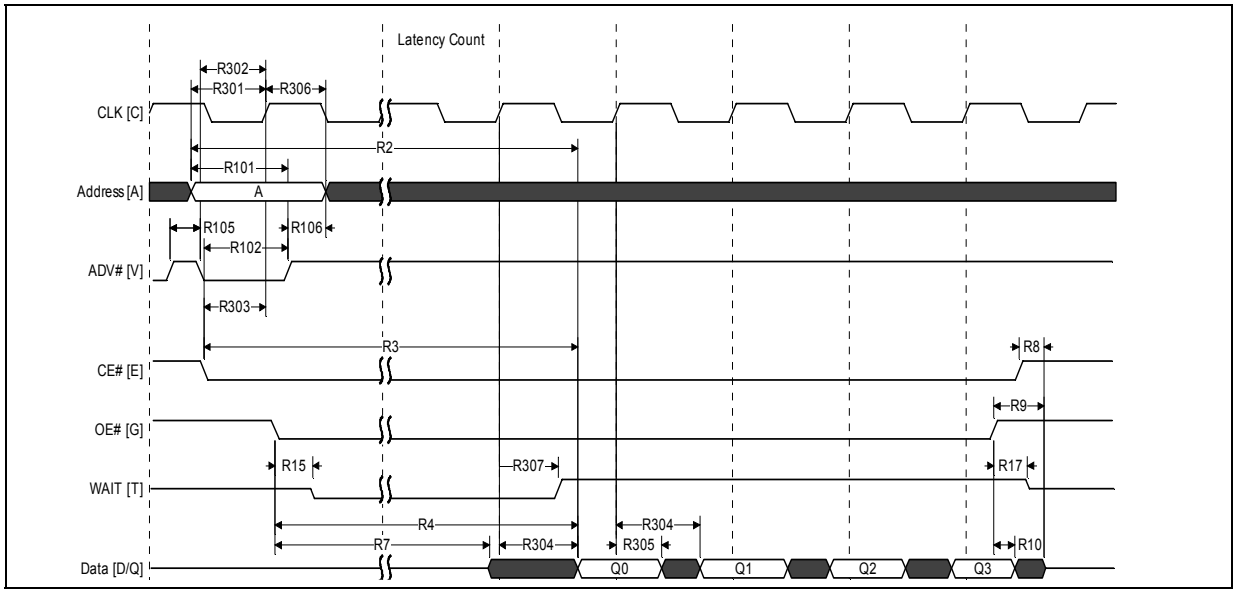

Note: WAIT is driven per OE# assertion during synchronous array or non-array read. WAIT asserted during initial latency and deasserted during valid data (RCR[10] = 0 Wait asserted low).

Downloaded from Arrow.com.

Figure 17: Burst Suspend Timing

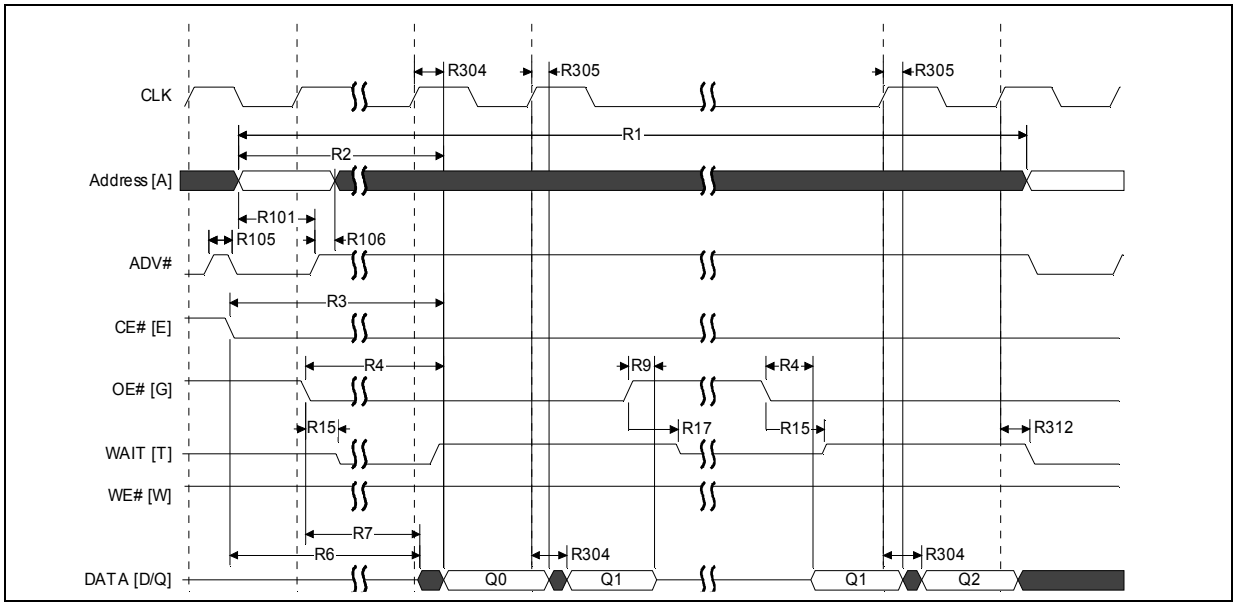

Notes:

1. CLK can be stopped in either high or low state.
2. WAIT is driven per OE# assertion during synchronous array or non-array read. WAIT asserted during initial latency and deasserted during valid data (RCR[10] = 0 Wait asserted low).

7.5 AC Write Specifications

Table 15: AC Write Specifications (Sheet 1 of 2)

Nbr.	Symbol	Parameter (1, 2)	Min	Max	Units	Notes
W1	t_{PHWL}	RST# high recovery to WE# low	150	-	ns	1,2,3
W2	t_{ELWL}	CE# setup to WE# low	0	-	ns	1,2,3
W3	t_{WLWH}	WE# write pulse width low	50	-	ns	1,2,4
W4	t_{DVWH}	Data setup to WE# high	50	-	ns	1,2
W5	t_{AVWH}	Address setup to WE# high	50	-	ns	
W6	t_{WHEH}	CE# hold from WE# high	0	-	ns	
W7	t_{WHDX}	Data hold from WE# high	0	-	ns	
W8	t_{WHAX}	Address hold from WE# high	0	-	ns	
W9	t_{WHWL}	WE# pulse width high	20	-	ns	1,2,5
W10	t_{VPWH}	V_{PP} setup to WE# high	200	-	ns	1,2,3,7
W11	t_{QVVL}	V_{PP} hold from Status read	0	-	ns	
W12	t_{QVBL}	WP# hold from Status read	0	-	ns	1,2,3,7
W13	t_{BHWH}	WP# setup to WE# high	200	-	ns	
W14	t_{WHGL}	WE# high to OE# low	0	-	ns	1,2,9
W16	t_{WHQV}	WE# high to read valid	t_{AVQV} + 35	-	ns	1,2,3,6,10
Write to Asynchronous Read Specifications						

Downloaded from Arrow.com.

Table 15: AC Write Specifications (Sheet 2 of 2)

Nbr.	Symbol	Parameter [1, 2]	Min	Max	Units	Notes
W18	t_{WHAV}	WE# high to Address valid	0	-	ns	1,2,3,6
Write to Synchronous Read Specifications						
W19	$t_{WHCH/L}$	WE# high to Clock valid	19	-	ns	1,2,3,6,10
W20	t_{WHVH}	WE# high to ADV# high	19	-	ns	
Write Specifications with Clock Active						
W21	t_{VHWL}	ADV# high to WE# low	-	20	ns	1,2,3,11
W22	t_{CHWL}	Clock high to WE# low	-	20	ns	

Notes:

1. Write timing characteristics during erase suspend are the same as write-only operations.
2. A write operation can be terminated with either CE# or WE#.
3. Sampled, not 100% tested.
4. Write pulse width low (t_{WLWH} or t_{ELEH}) is defined from CE# or WE# low (whichever occurs last) to CE# or WE# high (whichever occurs first). Hence, $t_{WLWH} = t_{ELEH} = t_{WLEH} = t_{ELWH}$.
5. Write pulse width high (t_{WHWL} or t_{EHEL}) is defined from CE# or WE# high (whichever occurs first) to CE# or WE# low (whichever occurs last). Hence, $t_{WHWL} = t_{EHEL} = t_{WHEL} = t_{EHWL}$).
6. t_{WHVH} or $t_{WHCH/L}$ must be met when transitioning from a write cycle to a synchronous burst read.
7. V_{PP} and WP# should be at a valid level until erase or program success is determined.
8. This specification is only applicable when transitioning from a write cycle to an asynchronous read. See spec W19 and W20 for synchronous read.
9. When doing a Read Status operation following any command that alters the Status Register, W14 is 20 ns.
10. Add 10 ns if the write operations results in a RCR or block lock status change, for the subsequent read operation to reflect this change.
11. These specs are required only when the device is in a synchronous mode and clock is active during address setup phase.

Figure 18: Write to Write Timing

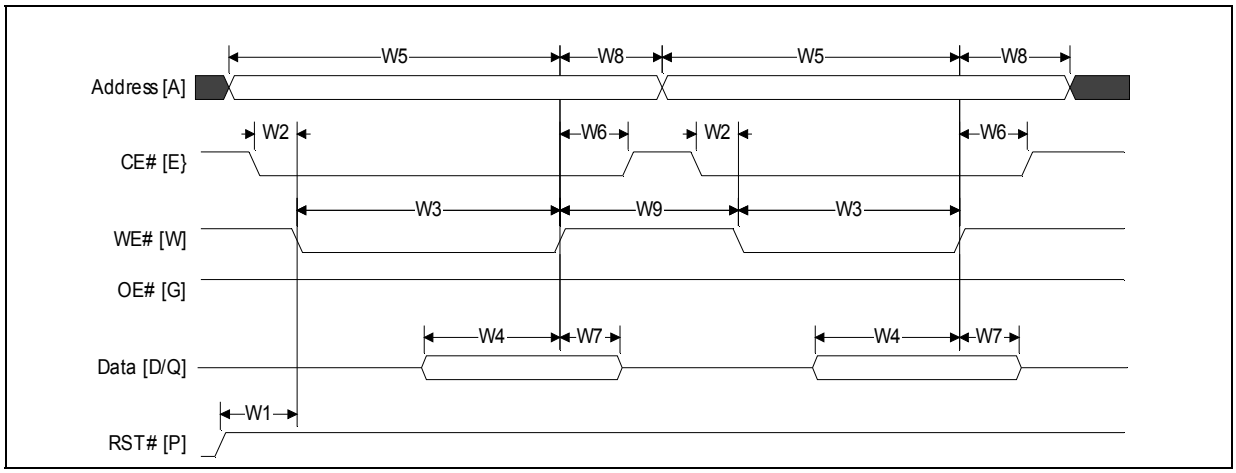

Downloaded from Arrow.com.

Figure 19: Asynchronous Read to Write Timing

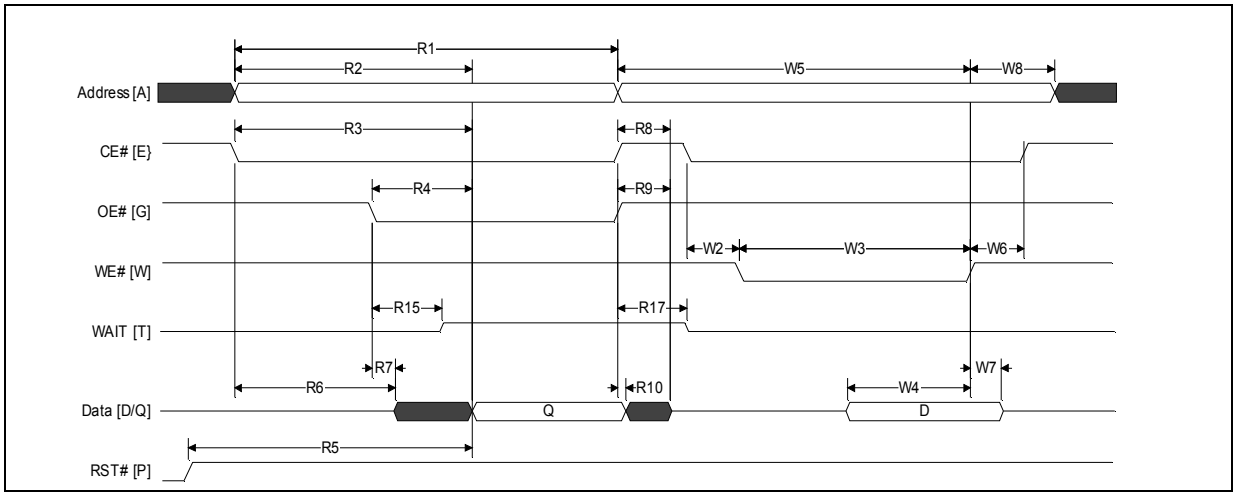

Note: WAIT deasserted during asynchronous read and during write. WAIT High-Z during write per OE# deasserted.

Figure 20: Write to Asynchronous Read Timing

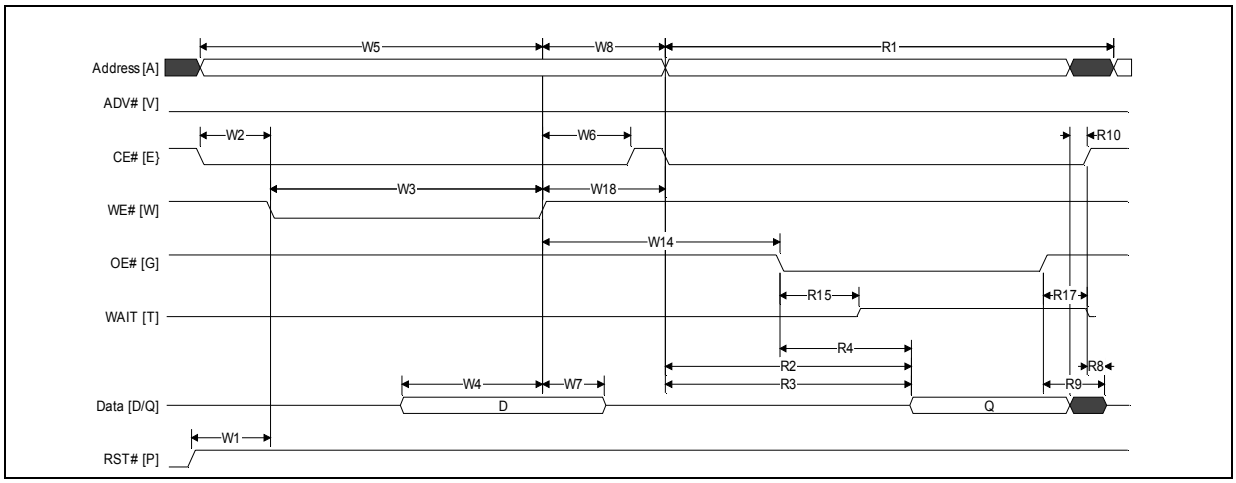

Downloaded from Arrow.com.

Figure 21: Synchronous Read to Write Timing

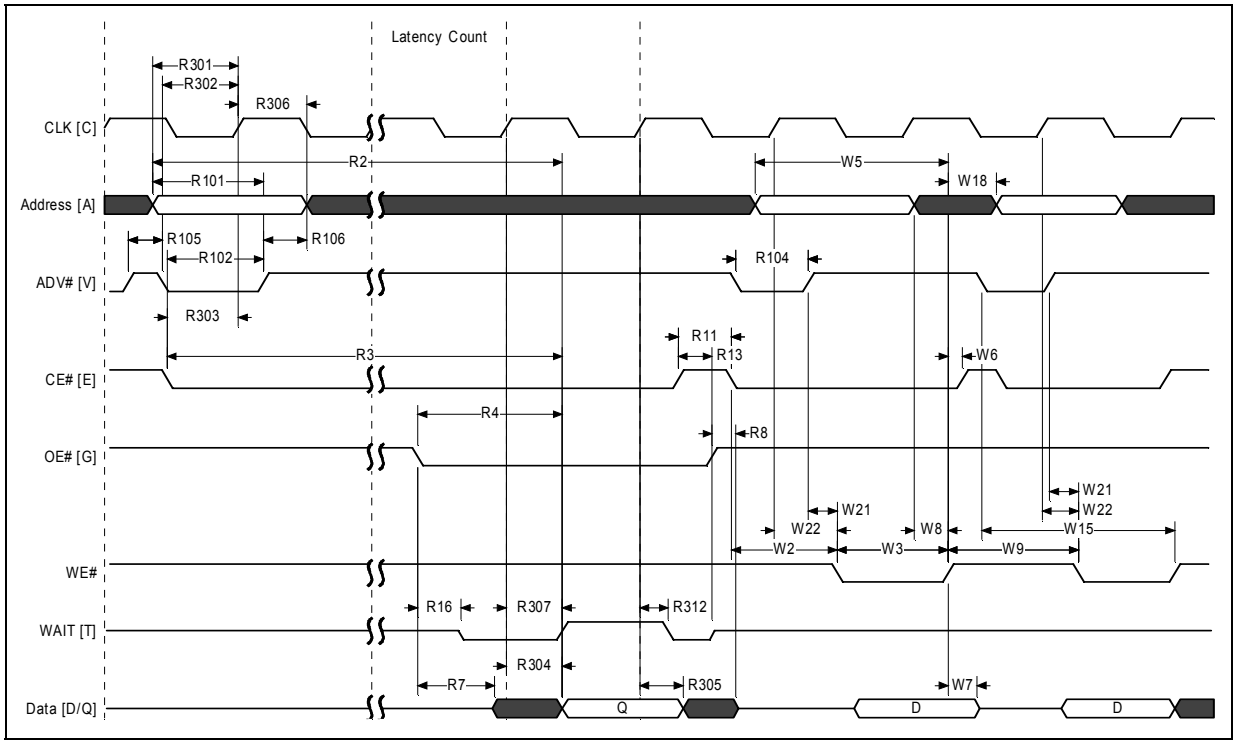

Note: WAIT shown deasserted and High-Z per OE# deassertion during write operation (RCR[10]=0 Wait asserted low). Clock is ignored during write operation.

Figure 22: Write to Synchronous Read Timing

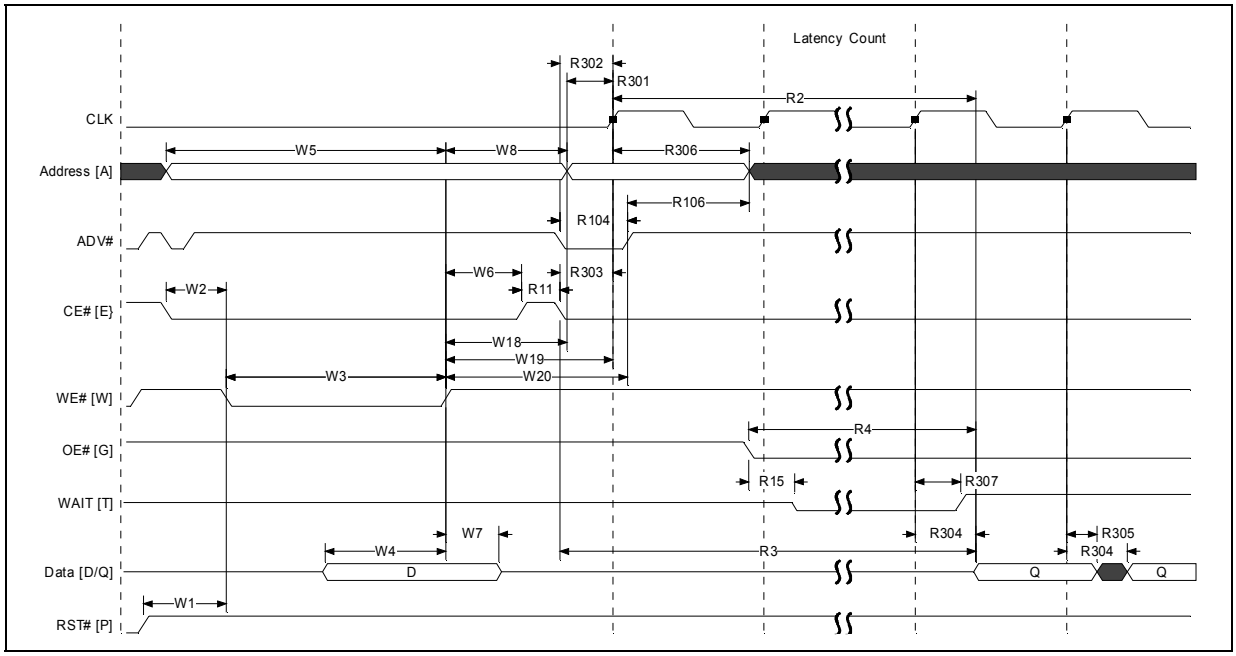

Note: WAIT shown deasserted and High-Z per OE# deassertion during write operation (RCR[10]=0 Wait asserted low).

Downloaded from Arrow.com.

7.6 Program and Erase Characteristics

Table 16:

Nbr.	Symbol	Parameter		V_{PPL}			V_{PPH}			Units	Notes
				Min	Typ	Max	Min	Typ	Max		
Conventional Word Programming											
W200	$t_{PROG/W}$	Program Time	Single word	-	90	180	-	85	170	µs	1
			Single cell	-	30	60	-	30	60		
Buffered Programming											
W200	$t_{PROG/W}$	Program Time	Single word	-	90	180	-	85	170	µs	1
W251	t_{BUFF}		One Buffer (32 words)	-	440	880	-	340	680		
Buffered Enhanced Factory Programming											
W451	$t_{BEFP/W}$	Program	Single word	n/a	n/a	n/a	-	10	-	µs	1,2
W452	$t_{BEFP/Setup}$		Buffered EFP Setup	n/a	n/a	n/a	5	-	-		1
Erasing and Suspending											
W500	$t_{ERS/PB}$	Erase Time	16-KWord Parameter	-	0.4	2.5	-	0.4	2.5	s	1
W501	$t_{ERS/MB}$		64-KWord Main	-	1.2	4	-	1.0	4		
W600	$t_{SUSP/P}$	Suspend Latency	Program suspend	-	20	25	-	20	25	µs	
W601	$t_{SUSP/E}$		Erase suspend	-	20	25	-	20	25		

Notes:

1. Typical values measured at T_C = +25 °C and nominal voltages. Performance numbers are valid for all speed versions. Excludes system overhead. Sampled, but not 100% tested.
2. Averaged over entire device.

Downloaded from Arrow.com.

8.0 Power and Reset Specifications

8.1 Power Up and Down

Power supply sequencing is not required if VCC, VCCQ, and VPP are connected together; If VCCQ and/or VPP are not connected to the VCC supply, then V_{CC} should attain V_{CCMIN} before applying VCCQ and VPP. Device inputs should not be driven before supply voltage equals V_{CCMIN}.

Power supply transitions should only occur when RST# is low. This protects the device from accidental programming or erasure during power transitions.

8.2 Reset Specifications

Asserting RST# during a system reset is important with automated program/erase devices because systems typically expect to read from flash memory when coming out of reset. If a CPU reset occurs without a flash memory reset, proper CPU initialization may not occur. This is because the flash memory may be providing status information, instead of array data as expected. Connect RST# to the same active-low reset signal used for CPU initialization.

Also, because the device is disabled when RST# is asserted, it ignores its control inputs during power-up/down. Invalid bus conditions are masked, providing a level of memory protection.

System designers should guard against spurious writes when V_{CC} voltages are above V_{LKO}. Because both WE# and CE# must be asserted for a write operation, deasserting either signal inhibits writes to the device.

The Command User Interface (CUI) architecture provides additional protection because alteration of memory contents can only occur after successful completion of a two-step command sequence (see Section 9.2, "Device Commands" on page 41).

Table 17:

Nbr.	Symbol	Parameter	Min	Max	Unit	Notes
P1	t_{PLPH}	RST# pulse width low	100	-	ns	1,2,3,4
P2	t_{PLRH}	RST# low to device reset during erase	-	25	µs	1,3,4,7
		RST# low to device reset during program	-	25		1,3,4,7
P3	t_{VCCPH}	V_{CC} Power valid to RST# deassertion (high)	60	-		1,4,5,6

Notes:
1. These specifications are valid for all device versions (packages and speeds).
2. The device may reset if t_{PLPH} is < $t_{PLPHmin}$, but this is not guaranteed.
3. Not applicable if RST# is tied to Vcc.
4. Sampled, but not 100% tested.
5. If RST# is tied to the V_{CC} supply, device will not be ready until t_{VCCPH} after $V_{CC} \geq V_{CC}$min.
6. If RST# is tied to any supply/signal with V_{CCQ} voltage levels, the RST# input voltage must not exceed V_{CC} until $V_{CC} \geq V_{CC}$min.
7. Reset completes within t_{PLPH} if RST# is asserted while no erase or program operation is executing.

Downloaded from Arrow.com.

Figure 23: Reset Operation Waveforms

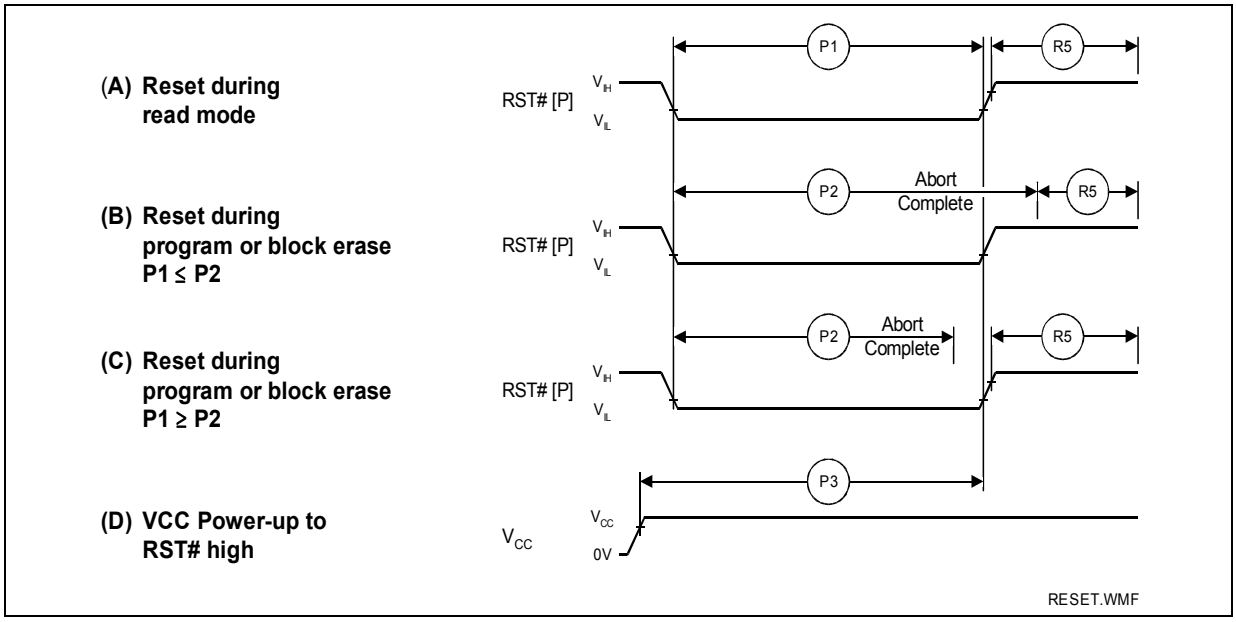

8.3 Power Supply Decoupling

Flash memory devices require careful power supply de-coupling. Three basic power supply current considerations are: 1) standby current levels; 2) active current levels; and 3) transient peaks produced when CE# and OE# are asserted and deasserted.

When the device is accessed, many internal conditions change. Circuits within the device enable charge-pumps, and internal logic states change at high speed. All of these internal activities produce transient signals. Transient current magnitudes depend on the device outputs' capacitive and inductive loading. Two-line control and correct de-coupling capacitor selection suppress transient voltage peaks.

Because Numonyx Multi-Level Cell (MLC) flash memory devices draw their power from VCC, VPP, and VCCQ, each power connection should have a 0.1 µF ceramic capacitor connected to a corresponding ground connection. High-frequency, inherently low-inductance capacitors should be placed as close as possible to package leads.

Additionally, for every eight devices used in the system, a 4.7 µF electrolytic capacitor should be placed between power and ground close to the devices. The bulk capacitor is meant to overcome voltage droop caused by PCB trace inductance.

8.4 Automatic Power Saving

Automatic Power Saving (APS) provides low power operation during a read's active state. I_{CCAPS} is the average current measured over any 5 ms time interval, 5 µs after CE# is deasserted. During APS, average current is measured over the same time interval 5 µs after the following events happen: (1) there is no internal read, program or erase operations cease; (2) CE# is asserted; (3) the address lines are quiescent and at V_{SSQ} or V_{CCQ}. OE# may also be driven during APS.

Downloaded from Arrow.com.

9.0 Device Operations

This section provides an overview of device operations. The system CPU provides control of all in-system read, write, and erase operations of the device via the system bus. The on-chip Write State Machine (WSM) manages all block-erase and word-program algorithms.

Device commands are written to the Command User Interface (CUI) to control all flash memory device operations. The CUI does not occupy an addressable memory location; it is the mechanism through which the flash device is controlled.

9.1 Bus Operations

CE#-low and RST# high enable device read operations. The device internally decodes upper address inputs to determine the accessed partition. ADV#-low opens the internal address latches. OE#-low activates the outputs and gates selected data onto the I/O bus.

In asynchronous mode, the address is latched when ADV# goes high or continuously flows through if ADV# is held low. In synchronous mode, the address is latched by the first of either the rising ADV# edge or the next valid CLK edge with ADV# low (WE# and RST# must be VIH; CE# must be VIL).

Bus cycles to/from the L30 device conform to standard microprocessor bus operations. Table 18 summarizes the bus operations and the logic levels that must be applied to the device control signal inputs.

Table 18: Bus Operations Summary

Bus Operation		RST#	CLK	ADV#	CE#	OE#	WE#	WAIT	DQ[15:0]	Notes
Read	Asynchronous	V_{IH}	X	L	L	L	H	Deasserted	Output	
	Synchronous	V_{IH}	Running	L	L	L	H	Driven	Output	
	Burst Suspend	V_{IH}	Halted	X	L	H	H	High-Z	Output	
Write		V_{IH}	X	L	L	H	L	High-Z	Input	1
Output Disable		V_{IH}	X	X	L	H	H	High-Z	High-Z	2
Standby		V_{IH}	X	X	H	X	X	High-Z	High-Z	2
Reset		V_{IL}	X	X	X	X	X	High-Z	High-Z	2,3

Notes:
1. Refer to the Table 19, "Command Bus Cycles" on page 41 for valid DQ[15:0] during a write operation.
2. X = Don't Care (H or L).
3. RST# must be at V_{SS} ± 0.2 V to meet the maximum specified power-down current.

9.1.1 Reads

To perform a read operation, RST# and WE# must be deasserted while CE# and OE# are asserted. CE# is the device-select control. When asserted, it enables the flash memory device. OE# is the data-output control. When asserted, the addressed flash memory data is driven onto the I/O bus. See Section 10.0, "Read Operations" on page 45 for details on the available read modes, and see Section 15.0, "Special Read States" on page 70 for details regarding the available read states.

Downloaded from Arrow.com.

The Automatic Power Savings (APS) feature provides low power operation following reads during active mode. After data is read from the memory array and the address lines are quiescent, APS automatically places the device into standby. In APS, device current is reduced to I_{CCAPS} (see Section 6.1, "DC Current Characteristics" on page 23).

9.1.2 Writes

To perform a write operation, both CE# and WE# are asserted while RST# and OE# are deasserted. During a write operation, address and data are latched on the rising edge of WE# or CE#, whichever occurs first. Table 19, "Command Bus Cycles" on page 41 shows the bus cycle sequence for each of the supported device commands, while Table 20, "Command Codes and Definitions" on page 42 describes each command. See Section 7.0, "AC Characteristics" on page 25 for signal-timing details.

Note: Write operations with invalid V_{CC} and/or V_{PP} voltages can produce spurious results and should not be attempted.

9.1.3 Output Disable

When OE# is deasserted, device outputs DQ[15:0] are disabled and placed in a high-impedance (High-Z) state, WAIT is also placed in High-Z.

9.1.4 Standby

When CE# is deasserted the device is deselected and placed in standby, substantially reducing power consumption. In standby, the data outputs are placed in High-Z, independent of the level placed on OE#. Standby current, I_{CCS}, is the average current measured over any 5 ms time interval, 5 µs after CE# is deasserted. During standby, average current is measured over the same time interval 5 µs after CE# is deasserted.

When the device is deselected (while CE# is deasserted) during a program or erase operation, it continues to consume active power until the program or erase operation is completed.

9.1.5 Reset

As with any automated device, it is important to assert RST# when the system is reset. When the system comes out of reset, the system processor attempts to read from the flash memory if it is the system boot device. If a CPU reset occurs with no flash memory reset, improper CPU initialization may occur because the flash memory may be providing status information rather than array data. Flash memory devices from Numonyx allow proper CPU initialization following a system reset through the use of the RST# input. RST# should be controlled by the same low-true reset signal that resets the system CPU.

After initial power-up or reset, the device defaults to asynchronous Read Array, and the Status Register is set to 0x80. Asserting RST# de-energizes all internal circuits, and places the output drivers in High-Z. When RST# is asserted, the device shuts down the operation in progress, a process which takes a minimum amount of time to complete. When RST# has been deasserted, the device is reset to asynchronous Read Array state.

Note: If RST# is asserted during a program or erase operation, the operation is terminated and the memory contents at the aborted location (for a program) or block (for an erase) are no longer valid, because the data may have been only partially written or erased.

Downloaded from Arrow.com.

When returning from a reset (RST# deasserted), a minimum wait is required before the initial read access outputs valid data. Also, a minimum delay is required after a reset before a write cycle can be initiated. After this wake-up interval passes, normal operation is restored. See Section 7.0, "AC Characteristics" on page 25 for details about signal-timing.

9.2 Device Commands

Device operations are initiated by writing specific device commands to the Command User Interface (CUI). See Table 19, "Command Bus Cycles" on page 41.

Several commands are used to modify array data including Word Program and Block Erase commands. Writing either command to the CUI initiates a sequence of internally-timed functions that culminate in the completion of the requested task. However, the operation can be aborted by either asserting RST# or by issuing an appropriate suspend command.

Table 19: Command Bus Cycles (Sheet 1 of 2)

Mode	Command	Bus Cycles	First Bus Cycle			Second Bus Cycle		
			Oper	Addr[1]	Data[2]	Oper	Addr[1]	Data[2]
Read	Read Array	1	Write	PnA	0xFF			
	Read Device Identifier	≥ 2	Write	PnA	0x90	Read	PBA+IA	ID
	CFI Query	≥ 2	Write	PnA	0x98	Read	PnA+QA	QD
	Read Status Register	2	Write	PnA	0x70	Read	PnA	SRD
	Clear Status Register	1	Write	X	0x50			
Program	Word Program	2	Write	WA	0x40/ 0x10	Write	WA	WD
	Buffered Program[3]	> 2	Write	WA	0xE8	Write	WA	N - 1
	Buffered Enhanced Factory Program (Buffered EFP)[4]	> 2	Write	WA	0x80	Write	WA	0xD0
Erase	Block Erase	2	Write	BA	0x20	Write	BA	0xD0
Suspend	Program/Erase Suspend	1	Write	X	0xB0			
	Program/Erase Resume	1	Write	X	0xD0			
Block Locking/ Unlocking	Lock Block	2	Write	BA	0x60	Write	BA	0x01
	Unlock Block	2	Write	BA	0x60	Write	BA	0xD0
	Lock-down Block	2	Write	BA	0x60	Write	BA	0x2F

Downloaded from Arrow.com.

Table 19: Command Bus Cycles (Sheet 2 of 2)

Mode	Command	Bus Cycles	First Bus Cycle			Second Bus Cycle		
			Oper	Addr[1]	Data[2]	Oper	Addr[1]	Data[2]
Protection	Program Protection Register	2	Write	PRA	0xC0	Write	PRA	PD
	Program Lock Register	2	Write	LRA	0xC0	Write	LRA	LRD
Configuration	Program Read Configuration Register	2	Write	RCD	0x60	Write	RCD	0x03

Notes:

1. First command cycle address should be the same as the operation's target address.
   PnA = Address within the partition.
   PBA = Partition base address.
   IA = Identification code address offset.
   QA = CFI Query address offset.
   BA = Address within the block.
   WA = Word address of memory location to be written.
   PRA = Protection Register address.
   LRA = Lock Register address.
   X = Any valid address within the device.
2. ID = Identifier data.
   QD = Query data on DQ[15:0].
   SRD = Status Register data.
   WD = Word data.
   N = Word count of data to be loaded into the write buffer.
   PD = Protection Register data.
   PD = Protection Register data.
   LRD = Lock Register data.
   RCD = Read Configuration Register data on A[15:0]. A[MAX:16] can select any partition.
3. The second cycle of the Buffered Program Command is the word count of the data to be loaded into the write buffer. This is followed by up to 32 words of data.Then the confirm command (0xD0) is issued, triggering the array programming operation.
4. The confirm command (0xD0) is followed by the buffer data.

9.3 Command Definitions

Valid device command codes and descriptions are shown in Table 20.

Table 20: Command Codes and Definitions (Sheet 1 of 3)

Mode	Code	Device Mode	Description
Read	0xFF	Read Array	Places the addressed partition in Read Array mode. Array data is output on DQ[15:0].
	0x70	Read Status Register	Places the addressed partition in Read Status Register mode. The partition enters this mode after a program or erase command is issued. Status Register data is output on DQ[7:0].
	0x90	Read Device ID or Configuration Register	Places the addressed partition in Read Device Identifier mode. Subsequent reads from addresses within the partition outputs manufacturer/device codes, Configuration Register data, Block Lock status, or Protection Register data on DQ[15:0].
	0x98	Read Query	Places the addressed partition in Read Query mode. Subsequent reads from the partition addresses output Common Flash Interface information on DQ[7:0].
	0x50	Clear Status Register	The WSM can only set Status Register error bits. The Clear Status Register command is used to clear the SR error bits.

Downloaded from Arrow.com.

Table 20: Command Codes and Definitions (Sheet 2 of 3)

Mode	Code	Device Mode	Description
Write	0x40	Word Program Setup	First cycle of a 2-cycle programming command; prepares the CUI for a write operation. On the next write cycle, the address and data are latched and the WSM executes the programming algorithm at the addressed location. During program operations, the partition responds only to Read Status Register and Program Suspend commands. CE# or OE# must be toggled to update the Status Register in asynchronous read. CE# or ADV# must be toggled to update the Status Register Data for synchronous Non-array read. The Read Array command must be issued to read array data after programming has finished.
	0x10	Alternate Word Program Setup	Equivalent to the Word Program Setup command, 0x40.
	0xE8	Buffered Program	This command loads a variable number of bytes up to the buffer size of 32 words onto the program buffer.
	0xD0	Buffered Program Confirm	The confirm command is Issued after the data streaming for writing into the buffer is done. This instructs the WSM to perform the Buffered Program algorithm, writing the data from the buffer to the flash memory array.
	0x80	Buffered Enhanced Factory Programming Setup	First cycle of a 2-cycle command; initiates Buffered Enhanced Factory Program mode (Buffered EFP). The CUI then waits for the Buffered EFP Confirm command, 0xD0, that initiates the Buffered EFP algorithm. All other commands are ignored when Buffered EFP mode begins.
	0xD0	Buffered EFP Confirm	If the previous command was Buffered EFP Setup (0x80), the CUI latches the address and data, and prepares the device for Buffered EFP mode.
Erase	0x20	Block Erase Setup	First cycle of a 2-cycle command; prepares the CUI for a block-erase operation. The WSM performs the erase algorithm on the block addressed by the Erase Confirm command. If the next command *is not* the Erase Confirm (0xD0) command, the CUI sets Status Register bits SR[4] and SR[5], and places the addressed partition in read status register mode.
	0xD0	Block Erase Confirm	If the first command was Block Erase Setup (0x20), the CUI latches the address and data, and the WSM erases the addressed block. During block-erase operations, the partition responds only to Read Status Register and Erase Suspend commands. CE# or OE# must be toggled to update the Status Register in asynchronous read. CE# or ADV# must be toggled to update the Status Register Data for synchronous Non-array read.
Suspend	0xB0	Program or Erase Suspend	This command issued to any device address initiates a suspend of the currently-executing program or block erase operation. The Status Register indicates successful suspend operation by setting either SR[2] (program suspended) or SR[6] (erase suspended), along with SR[7] (ready). The Write State Machine remains in the suspend mode regardless of control signal states (except for RST# asserted).
	0xD0	Suspend Resume	This command issued to any device address resumes the suspended program or block-erase operation.
Block Locking/ Unlocking	0x60	Lock Block Setup	First cycle of a 2-cycle command; prepares the CUI for block lock configuration changes. If the next command is not Block Lock (0x01), Block Unlock (0xD0), or Block Lock-Down (0x2F), the CUI sets Status Register bits SR[4] and SR[5], indicating a command sequence error.
	0x01	Lock Block	If the previous command was Block Lock Setup (0x60), the addressed block is locked.
	0xD0	Unlock Block	If the previous command was Block Lock Setup (0x60), the addressed block is unlocked. If the addressed block is in a lock-down state, the operation has no effect.
	0x2F	Lock-Down Block	If the previous command was Block Lock Setup (0x60), the addressed block is locked down.

Downloaded from Arrow.com.

Table 20: Command Codes and Definitions (Sheet 3 of 3)

Mode	Code	Device Mode	Description
Protection	0xC0	Program Protection Register Setup	First cycle of a 2-cycle command; prepares the device for a Protection Register or Lock Register program operation. The second cycle latches the register address and data, and starts the programming algorithm
Configuration	0x60	Read Configuration Register Setup	First cycle of a 2-cycle command; prepares the CUI for device read configuration. If the Set Read Configuration Register command (0x03) is not the next command, the CUI sets Status Register bits SR[4] and SR[5], indicating a command sequence error.
	0x03	Read Configuration Register	If the previous command was Read Configuration Register Setup (0x60), the CUI latches the address and writes A[15:0] to the Read Configuration Register. Following a Configure Read Configuration Register command, subsequent read operations access array data.

Downloaded from Arrow.com.

10.0 Read Operations

The device supports two read modes: asynchronous page mode and synchronous burst mode. Asynchronous page mode is the default read mode after device power-up or a reset. The Read Configuration Register must be configured to enable synchronous burst reads of the flash memory array (see Section 10.3, "Read Configuration Register (RCR)" on page 46).

Each partition of the device can be in any of four read states: Read Array, Read Identifier, Read Status or Read Query. Upon power-up, or after a reset, all partitions of the device default to Read Array. To change a partition's read state, the appropriate read command must be written to the device (see Section 9.2, "Device Commands" on page 41). See Section 15.0, "Special Read States" on page 70 for details regarding Read Status, Read ID, and CFI Query modes.

The following sections describe read-mode operations in detail.

10.1 Asynchronous Page-Mode Read

Following a device power-up or reset, asynchronous page mode is the default read mode and all partitions are set to Read Array. However, to perform array reads after any other device operation (e.g. write operation), the Read Array command must be issued in order to read from the flash memory array.

Note: Asynchronous page-mode reads can only be performed when Read Configuration Register bit RCR[15] is set (see Section 10.3, "Read Configuration Register (RCR)" on page 46).

To perform an asynchronous page-mode read, an address is driven onto A[MAX:0], and CE# and ADV# are asserted. WE# and RST# must already have been deasserted. WAIT is deasserted during asynchronous page mode. ADV# can be driven high to latch the address, or it must be held low throughout the read cycle. CLK is not used for asynchronous page-mode reads, and is ignored. If only asynchronous reads are to be performed, CLK should be tied to a valid V_{IH} level, WAIT signal can be floated and ADV# must be tied to ground. Array data is driven onto DQ[15:0] after an initial access time t_{AVQV} delay. (see Section 7.0, "AC Characteristics" on page 25).

In asynchronous page mode, four data words are "sensed" simultaneously from the flash memory array and loaded into an internal page buffer. The buffer word corresponding to the initial address on A[MAX:0] is driven onto DQ[15:0] after the initial access delay. Address bits A[MAX:2] select the 4-word page. Address bits A[1:0] determine which word of the 4-word page is output from the data buffer at any given time.

10.2 Synchronous Burst-Mode Read

Section 10.3, "Read Configuration Register (RCR)" on page 46continuous-wordsTo perform a synchronous burst- read, an initial address is driven onto A[MAX:0], and CE# and ADV# are asserted. WE# and RST# must already have been deasserted. ADV# is asserted, and then deasserted to latch the address. Alternately, ADV# can remain asserted throughout the burst access, in which case the address is latched on the next valid CLK edge while ADV# is asserted.

During synchronous array and non-array read modes, the first word is output from the data buffer on the next valid CLK edge after the initial access latency delay (see Section 10.3.2, "Latency Count" on page 47). Subsequent data is output on valid CLK edges following a minimum delay. However, for a synchronous non-array read, the same word of data will be output on successive clock edges until the burst length requirements are satisfied.

Downloaded from Arrow.com.

10.2.1 Burst Suspend

The Burst Suspend feature of the device can reduce or eliminate the initial access latency incurred when system software needs to suspend a burst sequence that is in progress in order to retrieve data from another device on the same system bus. The system processor can resume the burst sequence later. Burst suspend provides maximum benefit in non-cache systems.

Burst accesses can be suspended during the initial access latency (before data is received) or after the device has output data. When a burst access is suspended, internal array sensing continues and any previously latched internal data is retained. A burst sequence can be suspended and resumed without limit as long as device operation conditions are met.

Burst Suspend occurs when CE# is asserted, the current address has been latched (either ADV# rising edge or valid CLK edge), CLK is halted, and OE# is deasserted. CLK can be halted when it is at V_{IH} or V_{IL}. WAIT is in High-Z during OE# deassertion.

To resume the burst access, OE# is reasserted, and CLK is restarted. Subsequent CLK edges resume the burst sequence.

Within the device, CE# and OE# gate WAIT. Therefore, during Burst Suspend WAIT is placed in high-impedance state when OE# is deasserted and resumed active when OE# is re-asserted. See Figure 17, "Burst Suspend Timing" on page 32.

10.3 Read Configuration Register (RCR)

The RCR is used to select the read mode (synchronous or asynchronous), and it defines the synchronous burst characteristics of the device. To modify RCR settings, use the Configure Read Configuration Register command (see Section 9.2, "Device Commands" on page 41).

RCR contents can be examined using the Read Device Identifier command, and then reading from <partition base address> + 0x05 (see Section 15.2, "Read Device Identifier" on page 71).

The RCR is shown in Table 21. The following sections describe each RCR bit.

Table 21: Read Configuration Register Description (Sheet 1 of 2)

Read Configuration Register (RCR)															
Read Mode	RES	Latency Count			WAIT Polarity	Data Hold	WAIT Delay	Burst Seq	CLK Edge	RES	RES	Burst Wrap	Burst Length		
RM	R	LC[2:0]			WP	DH	WD	BS	CE	R	R	BW	BL[2:0]		
15	14	13	12	11	10	9	8	7	6	5	4	3	2	1	0

Bit	Name	Description
15	Read Mode (RM)	0 = Synchronous burst-mode read 1 = Asynchronous page-mode read (default)
14	Reserved (R)	Reserved bits should be cleared (0)
13:11	Latency Count (LC[2:0])	010 =Code 2 011 =Code 3 100 =Code 4 101 =Code 5 110 =Code 6 111 =Code 7 (default) (Other bit settings are reserved)

Downloaded from Arrow.com.

Table 21: Read Configuration Register Description (Sheet 2 of 2)

10	Wait Polarity (WP)	0 =WAIT signal is active low 1 =WAIT signal is active high (default)
9	Data Hold (DH)	0 =Data held for a 1-clock data cycle 1 =Data held for a 2-clock data cycle (default)
8	Wait Delay (WD)	0 =WAIT deasserted with valid data 1 =WAIT deasserted one data cycle before valid data (default)
7	Burst Sequence (BS)	0 =Reserved 1 =Linear (default)
6	Clock Edge (CE)	0 = Falling edge 1 = Rising edge (default)
5:4	Reserved (R)	Reserved bits should be cleared (0)
3	Burst Wrap (BW)	0 =Wrap; Burst accesses wrap within burst length set by BL[2:0] 1 =No Wrap; Burst accesses do not wrap within burst length (default)
2:0	Burst Length (BL[2:0])	001 =4-word burst 010 =8-word burst 011 =16-word burst 111 =Continuous-word burst (default) (Other bit settings are reserved)

Note: Latency Code 2, Data Hold for a 2-clock data cycle (DH = 1) Wait must be deasserted with valid data (WD = 0). Latency Code 2, Data Hold for a 2-cock data cycle (DH=1) Wait deasserted one data cycle before valid data (WD = 1) combination is not supported.

10.3.1 Read Mode

The Read Mode (RM) bit selects synchronous burst-mode or asynchronous page-mode operation for the device. When the RM bit is set, asynchronous page mode is selected (default). When RM is cleared, synchronous burst mode is selected.

10.3.2 Latency Count

The Latency Count bits, LC[2:0], tell the device how many clock cycles must elapse from the rising edge of ADV# (or from the first valid clock edge after ADV# is asserted) until the first data word is to be driven onto DQ[15:0]. The input clock frequency is used to determine this value. Figure 24 shows the data output latency for the different settings of LC[2:0].

Synchronous burst with a Latency Count setting of Code 4 will result in zero WAIT state; however, a Latency Count setting of Code 5 will cause 1 WAIT state (Code 6 will cause 2 WAIT states, and Code 7 will cause 3 WAIT states) after every four words, regardless of whether a 16-word boundary is crossed. If RCR[9] (Data Hold) bit is set (data hold of two clocks) this WAIT condition will not occur because enough clocks elapse during each burst cycle to eliminate subsequent WAIT states.

Refer to Table 22, "LC and Frequency Support (tAVQV/tCHQV = 85 ns / 17 ns)" on page 48 for Latency Code Settings.

Downloaded from Arrow.com.

Figure 24: First-Access Latency Count

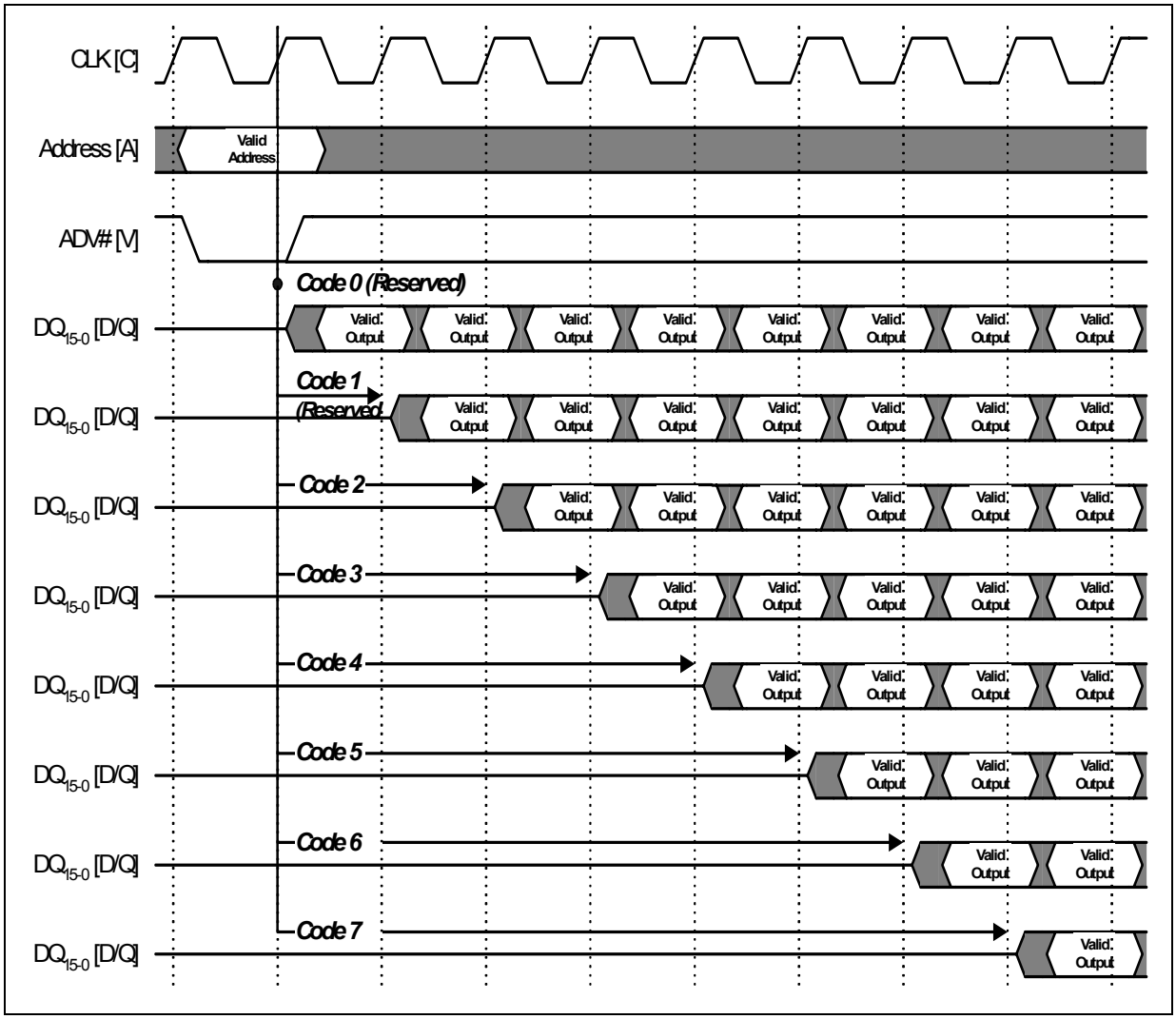

Table 22: LC and Frequency Support (t_{AVQV}/t_{CHQV} = 85 ns / 17 ns)

V_{CCQ} = 2.2 V to 3.3 V	
Latency Count Settings	**Frequency Support (MHz)**
2	≤ 27
3	≤ 40
4, 5, 6, or 7	≤ 52

See Figure 25, "Example Latency Count Setting using Code 3.

Downloaded from Arrow.com.

Figure 25: Example Latency Count Setting using Code 3

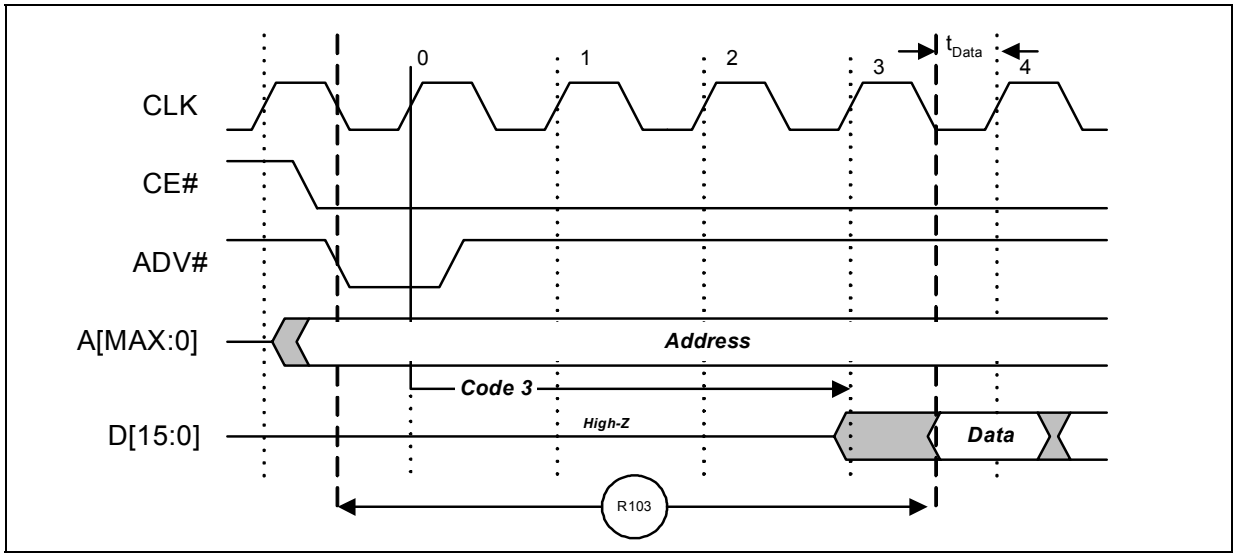

10.3.3 WAIT Polarity

The WAIT Polarity bit (WP), RCR[10] determines the asserted level (V_{OH} or V_{OL}) of WAIT. When WP is set, WAIT is asserted-high (default). When WP is cleared, WAIT is asserted-low. WAIT changes state on valid clock edges during active bus cycles (CE# asserted, OE# asserted, RST# deasserted).

10.3.3.1 WAIT Signal Function

The WAIT signal indicates data valid when the device is operating in synchronous mode (RCR[15]=0). The WAIT signal is only "deasserted" when data is valid on the bus.

When the device is operating in synchronous non-array read mode, such as read status, read ID, or read query the WAIT signal is also "deasserted" when data is valid on the bus.

WAIT behavior during synchronous non-array reads at the end of word line works correctly only on the first data access.

When the device is operating in asynchronous page mode, asynchronous single word read mode, and all write operations, WAIT is set to a deasserted state as determined by RCR[10]. See Figure 12, "Asynchronous Single-Word Read (ADV# Latch)" on page 29, and Figure 13, "Asynchronous Page-Mode Read Timing" on page 30.

Table 23: WAIT Functionality Table (Sheet 1 of 2)

Condition	WAIT	Notes
CE# = '1', OE# = 'X' CE# = 'X', OE# = '1'	High-Z	1
CE# ='0', OE# = '0'	Active	1
Synchronous Array Reads	Active	1

Downloaded from Arrow.com.

Table 23: WAIT Functionality Table (Sheet 2 of 2)

Condition	WAIT	Notes
Synchronous Non-Array Reads	Active	1
All Asynchronous Reads	Deasserted	1
All Writes	High-Z	1,2

Notes:
1. **Active:** WAIT is asserted until data becomes valid, then de-asserts
2. When OE# = V_{IH} during writes, WAIT = High-Z

10.3.4 Data Hold

For burst read operations, the Data Hold (DH) bit determines whether the data output remains valid on DQ[15:0] for one or two clock cycles. This period of time is called the "**data cycle**". When DH is set, output data is held for two clocks (default). When DH is cleared, output data is held for one clock (see Figure 26). The processor's data setup time and the flash memory's clock-to-data output delay should be considered when determining whether to hold output data for one or two clocks. A method for determining the Data Hold configuration is shown below:

To set the device at one clock data hold for subsequent reads, the following condition must be satisfied:

$$\mathbf{t_{CHQV\ (ns)} + t_{DATA}\ (ns) \leq One\ CLK\ Period\ (ns)}$$

t_{DATA} = Data set up to Clock (defined by CPU)

For example, with a clock frequency of 40 MHz, the clock period is 25 ns. Assuming t_{CHQV} = 20 ns and t_{DATA} = 4ns. Applying these values to the formula above:

$$20\ ns + 4\ ns \leq 25\ ns$$

The equation is satisfied and data will be available at every clock period with data hold setting at one clock. If $t_{CHQV\ (ns)} + t_{DATA}$ (ns) > One CLK Period (ns), data hold setting of 2 clock periods must be used.

Figure 26: Data Hold Timing

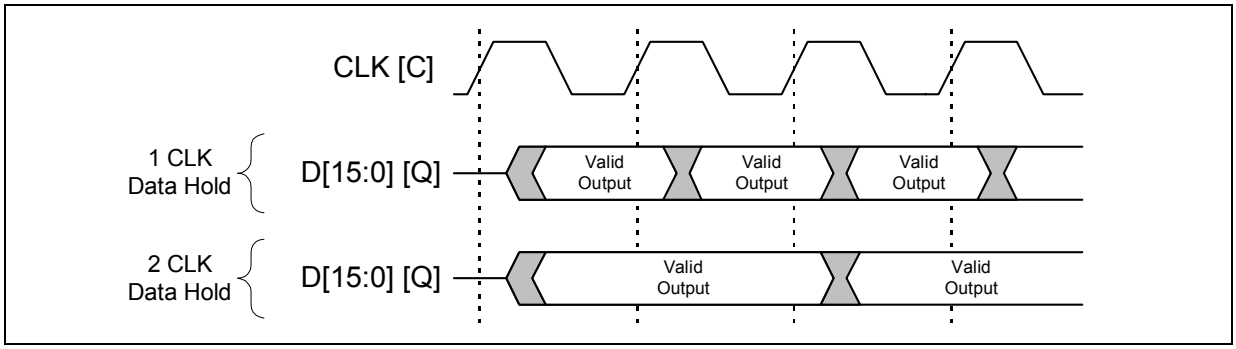

10.3.5 WAIT Delay

The WAIT Delay (WD) bit controls the WAIT assertion-delay behavior during synchronous burst reads. WAIT can be asserted either during or one data cycle before valid data is output on DQ[15:0]. When WD is set, WAIT is deasserted one data cycle *before* valid data (default). When WD is cleared, WAIT is deasserted *during* valid data.

Downloaded from Arrow.com.

10.3.6 Burst Sequence

The Burst Sequence (BS) bit selects linear-burst sequence (default). Only linear-burst sequence is supported. Table 24 shows the synchronous burst sequence for all burst lengths, as well as the effect of the Burst Wrap (BW) setting.

Table 24: Burst Sequence Word Ordering

Start Addr. (DEC)	Burst Wrap (RCR[3])	Burst Addressing Sequence (DEC)			
		4-Word Burst (BL[2:0] = 0b001)	8-Word Burst (BL[2:0] = 0b010)	16-Word Burst (BL[2:0] = 0b011)	Continuous Burst (BL[2:0] = 0b111)
0	0	0-1-2-3	0-1-2-3-4-5-6-7	0-1-2-3-4…14-15	0-1-2-3-4-5-6-…
1	0	1-2-3-0	1-2-3-4-5-6-7-0	1-2-3-4-5…15-0	1-2-3-4-5-6-7-…
2	0	2-3-0-1	2-3-4-5-6-7-0-1	2-3-4-5-6…15-0-1	2-3-4-5-6-7-8-…
3	0	3-0-1-2	3-4-5-6-7-0-1-2	3-4-5-6-7…15-0-1-2	3-4-5-6-7-8-9-…
4	0		4-5-6-7-0-1-2-3	4-5-6-7-8…15-0-1-2-3	4-5-6-7-8-9-10…
5	0		5-6-7-0-1-2-3-4	5-6-7-8-9…15-0-1-2-3-4	5-6-7-8-9-10-11…
6	0		6-7-0-1-2-3-4-5	6-7-8-9-10…15-0-1-2-3-4-5	6-7-8-9-10-11-12-…
7	0		7-0-1-2-3-4-5-6	7-8-9-10…15-0-1-2-3-4-5-6	7-8-9-10-11-12-13…
⋮	⋮	⋮	⋮	⋮	⋮
14	0			14-15-0-1-2…12-13	14-15-16-17-18-19-20-…
15	0			15-0-1-2-3…13-14	15-16-17-18-19-20-21-…
⋮	⋮	⋮	⋮	⋮	⋮
0	1	0-1-2-3	0-1-2-3-4-5-6-7	0-1-2-3-4…14-15	0-1-2-3-4-5-6-…
1	1	1-2-3-4	1-2-3-4-5-6-7-8	1-2-3-4-5…15-16	1-2-3-4-5-6-7-…
2	1	2-3-4-5	2-3-4-5-6-7-8-9	2-3-4-5-6…16-17	2-3-4-5-6-7-8-…
3	1	3-4-5-6	3-4-5-6-7-8-9-10	3-4-5-6-7…17-18	3-4-5-6-7-8-9-…
4	1		4-5-6-7-8-9-10-11	4-5-6-7-8…18-19	4-5-6-7-8-9-10…
5	1		5-6-7-8-9-10-11-12	5-6-7-8-9…19-20	5-6-7-8-9-10-11…
6	1		6-7-8-9-10-11-12-13	6-7-8-9-10…20-21	6-7-8-9-10-11-12-…
7	1		7-8-9-10-11-12-13-14	7-8-9-10-11…21-22	7-8-9-10-11-12-13…
⋮	⋮	⋮	⋮	⋮	⋮
14	1			14-15-16-17-18…28-29	14-15-16-17-18-19-20-…
15	1			15-16-17-18-19…29-30	15-16-17-18-19-20-21-…

10.3.7 Clock Edge

The Clock Edge (CE) bit selects either a rising (default) or falling clock edge for CLK. This clock edge is used at the start of a burst cycle, to output synchronous data, and to assert/deassert WAIT.

Downloaded from Arrow.com.

10.3.8 Burst Wrap

The Burst Wrap (BW) bit determines whether 4-word, 8-word, or 16-word burst length accesses wrap within the selected word-length boundaries or cross word-length boundaries. When BW is set, burst wrapping does not occur (default). When BW is cleared, burst wrapping occurs.

When performing synchronous burst reads with BW set (no wrap), an output delay may occur when the burst sequence crosses its first device-row (16-word) boundary. If the burst sequence's start address is 4-word aligned, then no delay occurs. If the start address is at the end of a 4-word boundary, the worst case output delay is one clock cycle less than the first access Latency Count. This delay can take place only once, and doesn't occur if the burst sequence does not cross a device-row boundary. WAIT informs the system of this delay when it occurs.

10.3.9 Burst Length

The Burst Length bit (BL[2:0]) selects the linear burst length for all synchronous burst reads of the flash memory array. The burst lengths are 4-word, 8-word, 16-word, and continuous word.

Continuous-burst accesses are linear only, and do not wrap within any word length boundaries (see Table 24, "Burst Sequence Word Ordering" on page 51). When a burst cycle begins, the device outputs synchronous burst data until it reaches the end of the "burstable" address space.

Downloaded from Arrow.com.

11.0 Programming Operations

The device supports three programming methods: Word Programming (40h/10h), Buffered Programming (E8h, D0h), and Buffered Enhanced Factory Programming (Buffered EFP) (80h, D0h). See Section 9.0, "Device Operations" on page 39 for details on the various programming commands issued to the device.

Successful programming requires the addressed block to be unlocked. If the block is locked down, WP# must be deasserted and the block must be unlocked before attempting to program the block. Attempting to program a locked block causes a program error (SR[4] and SR[1] set) and termination of the operation. See Section 13.0, "Security Modes" on page 61 for details on locking and unlocking blocks.

The following sections describe device programming in detail.

11.1 Word Programming

Word programming operations are initiated by writing the Word Program Setup command to the device (see Section 9.0, "Device Operations" on page 39). This is followed by a second write to the device with the address and data to be programmed. The partition accessed during both write cycles outputs Status Register data when read. The partition accessed during the second cycle (the data cycle) of the program command sequence is the location where the data is written. See Figure 39, "Word Program Flowchart" on page 80.

Programming can occur in only one partition at a time; all other partitions must be in a read state or in erase suspend. V_{PP} must be above V_{PPLK}, and within the specified V_{PPL} min/max values (nominally 1.8 V).

During programming, the Write State Machine (WSM) executes a sequence of internally-timed events that program the desired data bits at the addressed location, and verifies that the bits are sufficiently programmed. Programming the flash memory array changes "ones" to "zeros." Memory array bits that are zeros can be changed to ones only by erasing the block (see Section 12.0, "Erase Operations" on page 59).

The Status Register can be examined for programming progress and errors by reading any address within the partition that is being programmed. The partition remains in the Read Status Register state until another command is written to that partition. Issuing the Read Status Register command to another partition address sets that partition to the Read Status Register state, allowing programming progress to be monitored at that partition's address.

Status Register bit SR[7] indicates the programming status while the sequence executes. Commands that can be issued to the programming partition during programming are Program Suspend, Read Status Register, Read Device Identifier, CFI Query, and Read Array (this returns unknown data).

When programming has finished, Status Register bit SR[4] (when set) indicates a programming failure. If SR[3] is set, the WSM could not perform the word programming operation because V_{PP} was outside of its acceptable limits. If SR[1] is set, the word programming operation attempted to program a locked block, causing the operation to abort.

Before issuing a new command, the Status Register contents should be examined and then cleared using the Clear Status Register command. Any valid command can follow, when word programming has completed.

Downloaded from Arrow.com.

11.1.1 Factory Word Programming

Factory word programming is similar to word programming in that it uses the same commands and programming algorithms. However, factory word programming enhances the programming performance with $V_{PP} = V_{PPH}$. This can enable faster programming times during OEM manufacturing processes. Factory word programming is not intended for extended use. See Section 5.2, "Operating Conditions" on page 22 for limitations when $V_{PP} = V_{PPH}$.

Note: When $V_{PP} = V_{PPL}$, the device draws programming current from the V_{CC} supply. If V_{PP} is driven by a logic signal, V_{PPL} must remain above V_{PPL} MIN to program the device. When $V_{PP} = V_{PPH}$, the device draws programming current from the V_{PP} supply. Figure 27, "Example VPP Supply Connections" on page 58 shows examples of device power supply configurations.

11.2 Buffered Programming

The device features a 32-word buffer to enable optimum programming performance. For Buffered Programming, data is first written to an on-chip write buffer. Then the buffer data is programmed into the flash memory array in buffer-size increments. This can improve system programming performance significantly over non-buffered programming.

When the Buffered Programming Setup command is issued, Status Register information is updated and reflects the availability of the buffer. SR[7] indicates buffer availability: if set, the buffer is available; if cleared, the buffer is not available. To retry, issue the Buffered Programming Setup command again, and re-check SR[7]. When SR[7] is set, the buffer is ready for loading. (see Figure 41, "Buffer Program Flowchart" on page 82).

On the next write, a word count is written to the device at the buffer address. This tells the device how many data words will be written to the buffer, up to the maximum size of the buffer.

On the next write, a device start address is given along with the first data to be written to the flash memory array. Subsequent writes provide additional device addresses and data. All data addresses must lie within the start address plus the word count. Optimum programming performance and lower power usage are obtained by aligning the starting address at the beginning of a 32-word boundary (A[4:0] = 0x00). Crossing a 32-word boundary during programming will double the total programming time.

After the last data is written to the buffer, the Buffered Programming Confirm command must be issued to the original block address. The WSM begins to program buffer contents to the flash memory array. If a command other than the Buffered Programming Confirm command is written to the device, a command sequence error occurs and Status Register bits SR[7,5,4] are set. If an error occurs while writing to the array, the device stops programming, and Status Register bits SR[7,4] are set, indicating a programming failure.

Reading from another partition is allowed while data is being programmed into the array from the write buffer (see Figure 41, "Buffer Program Flowchart" on page 82).

When Buffered Programming has completed, additional buffer writes can be initiated by issuing another Buffered Programming Setup command and repeating the buffered program sequence. Buffered programming may be performed with $V_{PP} = V_{PPL}$ or V_{PPH} (see Section 5.2, "Operating Conditions" on page 22 for limitations when operating the device with $V_{PP} = V_{PPH}$).

If an attempt is made to program past an erase-block boundary using the Buffered Program command, the device aborts the operation. This generates a command sequence error, and Status Register bits SR[5,4] are set.

Downloaded from Arrow.com.

If Buffered programming is attempted while V_{PP} is below V_{PPLK}, Status Register bits SR[4,3] are set. If any errors are detected that have set Status Register bits, the Status Register should be cleared using the Clear Status Register command.

11.3 Buffered Enhanced Factory Programming

Buffered Enhanced Factory Programing (Buffered EFP) speeds up Multi-Level Cell (MLC) flash programming for today's beat-rate-sensitive manufacturing environments. The enhanced programming algorithm used in Buffered EFP eliminates traditional programming elements that drive up overhead in device programmer systems.

Buffered EFP consists of three phases: Setup, Program/Verify, and Exit (see Figure 42, "Buffered EFP Flowchart" on page 83). It uses a write buffer to spread MLC program performance across 32 data words. Verification occurs in the same phase as programming to accurately program the flash memory cell to the correct bit state.

A single two-cycle command sequence programs the entire block of data. This enhancement eliminates three write cycles per buffer: two commands and the word count for each set of 32 data words. Host programmer bus cycles fill the device's write buffer followed by a status check. SR[0] indicates when data from the buffer has been programmed into sequential flash memory array locations.

Following the buffer-to-flash array programming sequence, the Write State Machine (WSM) increments internal addressing to automatically select the next 32-word array boundary. This aspect of Buffered EFP saves host programming equipment the address-bus setup overhead.

With adequate continuity testing, programming equipment can rely on the WSM's internal verification to ensure that the device has programmed properly. This eliminates the external post-program verification and its associated overhead.

11.3.1 Buffered EFP Requirements and Considerations

Buffered EFP requirements:

- Ambient temperature: T_A = 25°C, ±5°C
- V_{CC} within specified operating range.
- VPP driven to V_{PPH}.
- Target block unlocked before issuing the Buffered EFP Setup and Confirm commands.
- The first-word address (WA0) for the block to be programmed must be held constant from the setup phase through all data streaming into the target block, until transition to the exit phase is desired.
- WA0 must align with the start of an array buffer boundary[1].

Buffered EFP considerations:

- For optimum performance, cycling must be below 100 erase cycles per block[2].
- Buffered EFP programs one block at a time; all buffer data must fall within a single block[3].
- Buffered EFP cannot be suspended.
- Programming to the flash memory array can occur only when the buffer is full[4].
- Read operation while performing Buffered EFP is not supported.

Notes:

1. Word buffer boundaries in the array are determined by A[4:0] (0x00 through 0x1F). The alignment start point is A[4:0] = 0x00.

Downloaded from Arrow.com.

2. Some degradation in performance may occur if this limit is exceeded, but the internal algorithm continues to work properly.
3. If the internal address counter increments beyond the block's maximum address, addressing wraps around to the beginning of the block.
4. If the number of words is less than 32, remaining locations must be filled with 0xFFFF.

11.3.2 Buffered EFP Setup Phase

After receiving the Buffered EFP Setup and Confirm command sequence, Status Register bit SR[7] (Ready) is cleared, indicating that the WSM is busy with Buffered EFP algorithm startup. A delay before checking SR[7] is required to allow the WSM enough time to perform all of its setups and checks (Block-Lock status, V_{PP} level, etc.). If an error is detected, SR[4] is set and Buffered EFP operation terminates. If the block was found to be locked, SR[1] is also set. SR[3] is set if the error occurred due to an incorrect V_{PP} level.

Note: Reading from the device after the Buffered EFP Setup and Confirm command sequence outputs Status Register data. Do not issue the Read Status Register command; it will be interpreted as data to be loaded into the buffer.

11.3.3 Buffered EFP Program/Verify Phase

After the Buffered EFP Setup Phase has completed, the host programming system must check SR[7,0] to determine the availability of the write buffer for data streaming. SR[7] cleared indicates the device is busy and the Buffered EFP program/verify phase is activated. SR[0] indicates the write buffer is available.

Two basic sequences repeat in this phase: loading of the write buffer, followed by buffer data programming to the array. For Buffered EFP, the count value for buffer loading is always the maximum buffer size of 32 words. During the buffer-loading sequence, data is stored to sequential buffer locations starting at address 0x00. Programming of the buffer contents to the flash memory array starts as soon as the buffer is full. If the number of words is less than 32, the remaining buffer locations must be filled with 0xFFFF.

Caution: **The buffer must be completely filled for programming to occur. Supplying an address outside of the current block's range during a buffer-fill sequence causes the algorithm to exit immediately. Any data previously loaded into the buffer during the fill cycle is not programmed into the array.**

The starting address for data entry must be buffer size aligned, if not the Buffered EFP algorithm will be aborted and the program fail (SR[4]) flag will be set.

Data words from the write buffer are directed to sequential memory locations in the flash memory array; programming continues from where the previous buffer sequence ended. The host programming system must poll SR[0] to determine when the buffer program sequence completes. SR[0] cleared indicates that all buffer data has been transferred to the flash array; SR[0] set indicates that the buffer is not available yet for the next fill cycle. The host system may check full status for errors at any time, but it is only necessary on a block basis after Buffered EFP exit. After the buffer fill cycle, no write cycles should be issued to the device until SR[0] = 0 and the device is ready for the next buffer fill.

Note: Any spurious writes are ignored after a buffer fill operation and when internal program is proceeding.

The host programming system continues the Buffered EFP algorithm by providing the next group of data words to be written to the buffer. Alternatively, it can terminate this phase by changing the block address to one outside of the current block’s range.

Downloaded from Arrow.com.

The Program/Verify phase concludes when the programmer writes to a different block address; data supplied must be 0xFFFF. Upon Program/Verify phase completion, the device enters the Buffered EFP Exit phase.

11.3.4 Buffered EFP Exit Phase

When SR[7] is set, the device has returned to normal operating conditions. A full status check should be performed on the partition being programmed at this time to ensure the entire block programmed successfully. When exiting the Buffered EFP algorithm with a block address change, the read mode of both the programmed and the addressed partition will not change. After Buffered EFP exit, any valid command can be issued to the device.

11.4 Program Suspend

Issuing the Program Suspend command while programming suspends the programming operation. This allows data to be accessed from memory locations other than the one being programmed. The Program Suspend command can be issued to any device address; the corresponding partition is not affected. A program operation can be suspended to perform reads only. Additionally, a program operation that is running during an erase suspend can be suspended to perform a read operation (see Figure 40, "Program Suspend/Resume Flowchart" on page 81).

When a programming operation is executing, issuing the Program Suspend command requests the WSM to suspend the programming algorithm at predetermined points. The partition that is suspended continues to output Status Register data after the Program Suspend command is issued. Programming is suspended when Status Register bits SR[7,2] are set. Suspend latency is specified in Section 7.6, "Program and Erase Characteristics" on page 36.

To read data from blocks within the suspended partition, the Read Array command must be issued to that partition. Read Array, Read Status Register, Read Device Identifier, CFI Query, and Program Resume are valid commands during a program suspend.

A program operation does not need to be suspended in order to read data from a block in another partition that is not programming. If the other partition is already in a Read Array, Read Device Identifier, or CFI Query state, issuing a valid address returns corresponding read data. If the other partition is not in a read mode, one of the read commands must be issued to the partition before data can be read.

During a program suspend, deasserting CE# places the device in standby, reducing active current. V_{PP} must remain at its programming level, and WP# must remain unchanged while in program suspend. If RST# is asserted, the device is reset.

11.5 Program Resume

The Resume command instructs the device to continue programming, and automatically clears Status Register bits SR[7,2]. This command can be written to any partition. When read at the partition that's programming, the device outputs data corresponding to the partition's last state. If error bits are set, the Status Register should be cleared before issuing the next instruction. RST# must remain deasserted (see Figure 40, "Program Suspend/Resume Flowchart" on page 81).

Downloaded from Arrow.com.

11.6 Program Protection

When $V_{PP} = V_{IL}$, absolute hardware write protection is provided for all device blocks. If V_{PP} is below V_{PPLK}, programming operations halt and SR[3] is set indicating a V_{PP}-level error. Block lock registers are not affected by the voltage level on V_{PP}; they may still be programmed and read, even if V_{PP} is less than V_{PPLK}.

Figure 27: Example VPP Supply Connections

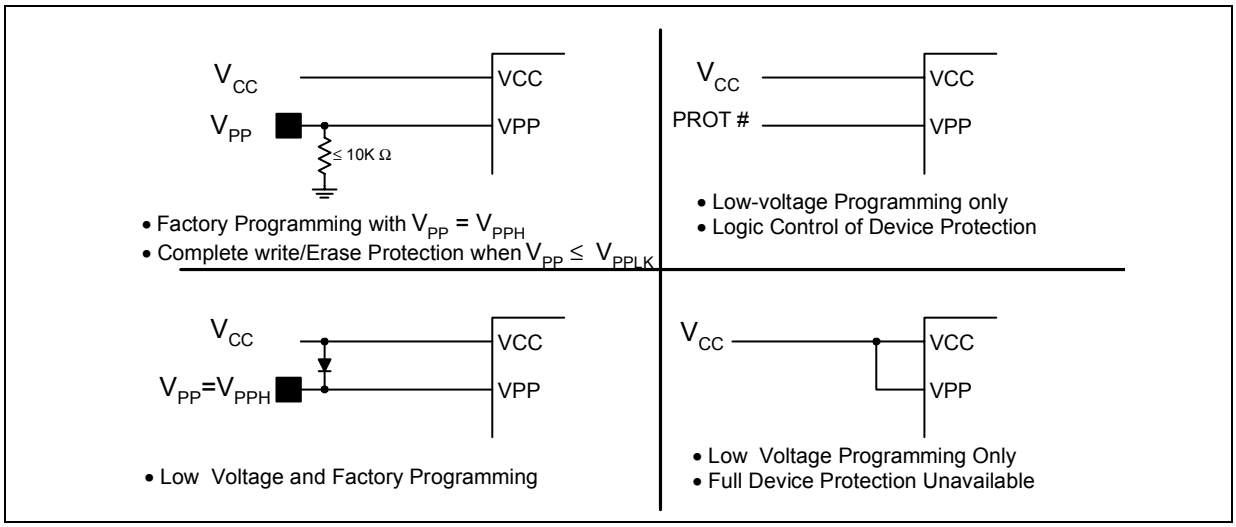

Downloaded from Arrow.com.

12.0 Erase Operations

Flash erasing is performed on a block basis. An entire block is erased each time an erase command sequence is issued, and only one block is erased at a time. When a block is erased, all bits within that block read as logical ones. The following sections describe block erase operations in detail.

12.1 Block Erase

Block erase operations are initiated by writing the Block Erase Setup command to the address of the block to be erased (see Section 9.2, "Device Commands" on page 41). Next, the Block Erase Confirm command is written to the address of the block to be erased. Erasing can occur in only one partition at a time; all other partitions must be in a read state. If the device is placed in standby (CE# deasserted) during an erase operation, the device completes the erase operation before entering standby. V_{PP} must be above V_{PPLK} and the block must be unlocked (see Figure 43, "Block Erase Flowchart" on page 84).

During a block erase, the Write State Machine (WSM) executes a sequence of internally-timed events that conditions, erases, and verifies all bits within the block. Erasing the flash memory array changes "zeros" to "ones." Memory array bits that are ones can be changed to zeros only by programming the block (see Section 11.0, "Programming Operations" on page 53).

The Status Register can be examined for block erase progress and errors by reading any address within the partition that is being erased. The partition remains in the Read Status Register state until another command is written to that partition. Issuing the Read Status Register command to another partition address sets that partition to the Read Status Register state, allowing erase progress to be monitored at that partition's address. SR[0] indicates whether the addressed partition or another partition is erasing. The partition's Status Register bit SR[7] is set upon erase completion.

Status Register bit SR[7] indicates block erase status while the sequence executes. When the erase operation has finished, Status Register bit SR[5] indicates an erase failure if set. SR[3] set would indicate that the WSM could not perform the erase operation because V_{PP} was outside of its acceptable limits. SR[1] set indicates that the erase operation attempted to erase a locked block, causing the operation to abort.

Before issuing a new command, the Status Register contents should be examined and then cleared using the Clear Status Register command. Any valid command can follow once the block erase operation has completed.

12.2 Erase Suspend

Issuing the Erase Suspend command while erasing suspends the block erase operation. This allows data to be accessed from memory locations other than the one being erased. The Erase Suspend command can be issued to any device address; the corresponding partition is not affected. A block erase operation can be suspended to perform a word or buffer program operation, or a read operation within any block except the block that is erase suspended (see Figure 40, "Program Suspend/Resume Flowchart" on page 81).

When a block erase operation is executing, issuing the Erase Suspend command requests the WSM to suspend the erase algorithm at predetermined points. The partition that is suspended continues to output Status Register data after the Erase Suspend command is issued. Block erase is suspended when Status Register bits SR[7,6] are set. Suspend latency is specified in Section 7.6, "Program and Erase Characteristics" on page 36.

Downloaded from Arrow.com.

To read data from blocks within the suspended partition (other than an erase-suspended block), the Read Array command must be issued to that partition first. During Erase Suspend, a Program command can be issued to any block other than the erase-suspended block. Block erase cannot resume until program operations initiated during erase suspend complete. Read Array, Read Status Register, Read Device Identifier, CFI Query, and Erase Resume are valid commands during Erase Suspend. Additionally, Clear Status Register, Program, Program Suspend, Block Lock, Block Unlock, and Block Lock-Down are valid commands during Erase Suspend.

To read data from a block in a partition that is not erasing, the erase operation does not need to be suspended. If the other partition is already in Read Array, Read Device Identifier, or CFI Query, issuing a valid address returns corresponding data. If the other partition is not in a read state, one of the read commands must be issued to the partition before data can be read.

During an erase suspend, deasserting CE# places the device in standby, reducing active current. V_{PP} must remain at a valid level, and WP# must remain unchanged while in erase suspend. If RST# is asserted, the device is reset.

12.3 Erase Resume

The Erase Resume command instructs the device to continue erasing, and automatically clears status register bits SR[7,6]. This command can be written to any partition. When read at the partition that's erasing, the device outputs data corresponding to the partition's last state. If status register error bits are set, the Status Register should be cleared before issuing the next instruction. RST# must remain deasserted (see Figure 40, "Program Suspend/Resume Flowchart" on page 81).

12.4 Erase Protection

When $V_{PP} = V_{IL}$, absolute hardware erase protection is provided for all device blocks. If V_{PP} is below V_{PPLK}, erase operations halt and SR[3] is set indicating a V_{PP}-level error.

Downloaded from Arrow.com.

13.0 Security Modes

The device features security modes used to protect the information stored in the flash memory array. The following sections describe each security mode in detail.

13.1 Block Locking

Individual instant block locking is used to protect user code and/or data within the flash memory array. All blocks power up in a locked state to protect array data from being altered during power transitions. Any block can be locked or unlocked with no latency. Locked blocks cannot be programmed or erased; they can only be read.

Software-controlled security is implemented using the Block Lock and Block Unlock commands. Hardware-controlled security can be implemented using the Block Lock-Down command along with asserting WP#. Also, V_{PP} data security can be used to inhibit program and erase operations (see Section 11.6, "Program Protection" on page 58 and Section 12.4, "Erase Protection" on page 60).

13.1.1 Lock Block

To lock a block, issue the Lock Block Setup command. The next command must be the Lock Block command issued to the desired block's address (see Section 9.2, "Device Commands" on page 41 and Figure 45, "Block Lock Operations Flowchart" on page 86). If the Set Read Configuration Register command is issued after the Block Lock Setup command, the device configures the RCR instead.

Block lock and unlock operations are not affected by the voltage level on V_{PP}. The block lock bits may be modified and/or read even if V_{PP} is below V_{PPLK}.

13.1.2 Unlock Block

The Unlock Block command is used to unlock blocks (see Section 9.2, "Device Commands" on page 41). Unlocked blocks can be read, programmed, and erased. Unlocked blocks return to a locked state when the device is reset or powered down. If a block is in a lock-down state, WP# must be deasserted before it can be unlocked (see Figure 28, "Block Locking State Diagram" on page 62).

13.1.3 Lock-Down Block

A locked or unlocked block can be locked-down by writing the Lock-Down Block command sequence (see Section 9.2, "Device Commands" on page 41). Blocks in a lock-down state cannot be programmed or erased; they can only be read. However, unlike locked blocks, their locked state cannot be changed by software commands alone. A locked-down block can only be unlocked by issuing the Unlock Block command with WP# deasserted. To return an unlocked block to locked-down state, a Lock-Down command must be issued prior to changing WP# to V_{IL}. Locked-down blocks revert to the locked state upon reset or power up the device (see Figure 28, "Block Locking State Diagram" on page 62).

Downloaded from Arrow.com.

13.1.4 Block Lock Status

The Read Device Identifier command is used to determine a block's lock status (see Section 15.2, "Read Device Identifier" on page 71). Data bits DQ[1:0] display the addressed block's lock status; DQ0 is the addressed block's lock bit, while DQ1 is the addressed block's lock-down bit.

Figure 28: Block Locking State Diagram

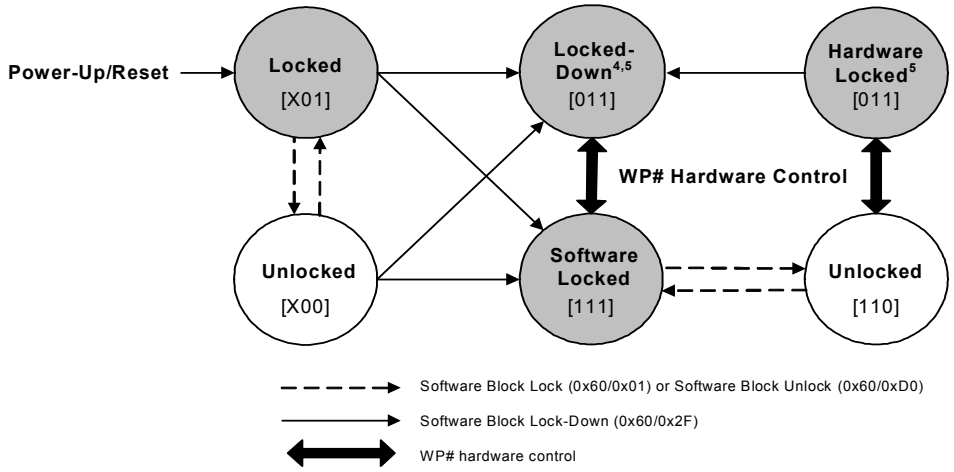

Notes:
1. [a,b,c] represents [WP#, DQ1, DQ0]. X = Don't Care.
2. DQ1 indicates Block Lock-Down status. DQ1 = '0', Lock-Down has not been issued to this block. DQ1 = '1', Lock-Down has been issued to this block.
3. DQ0 indicates block lock status. DQ0 = '0', block is unlocked. DQ0 = '1', block is locked.
4. Locked-down = Hardware + Software locked.
5. [011] states should be tracked by system software to determine difference between Hardware Locked and Locked-Down states.

13.1.5 Block Locking During Suspend

Block lock and unlock changes can be performed during an erase suspend. To change block locking during an erase operation, first issue the Erase Suspend command. Monitor the Status Register until SR[7] and SR[6] are set, indicating the device is suspended and ready to accept another command.

Next, write the desired lock command sequence to a block, which changes the lock state of that block. After completing block lock or unlock operations, resume the erase operation using the Erase Resume command.

Note: A Lock Block Setup command followed by any command other than Lock Block, Unlock Block, or Lock-Down Block produces a command sequence error and set Status Register bits SR[4] and SR[5]. If a command sequence error occurs during an erase suspend, SR[4] and SR[5] remains set, even after the erase operation is resumed. Unless the Status Register is cleared using the Clear Status Register command before resuming the erase operation, possible erase errors may be masked by the command sequence error.

If a block is locked or locked-down during an erase suspend of the *same* block, the lock status bits change immediately. However, the erase operation completes when it is resumed. Block lock operations cannot occur during a program suspend. See Appendix A, "Write State Machine (WSM)" on page 73, which shows valid commands during an erase suspend.

Downloaded from Arrow.com.

13.2 Protection Registers

The device contains 17 Protection Registers (PRs) that can be used to implement system security measures and/or device identification. Each Protection Register can be individually locked.

The first 128-bit Protection Register is comprised of two 64-bit (8-word) segments. The lower 64-bit segment is pre-programmed at the factory with a unique 64-bit number. The other 64-bit segment, as well as the other sixteen 128-bit Protection Registers, are blank. Users can program these registers as needed. When programmed, users can then lock the Protection Register(s) to prevent additional bit programming (see Figure 29, "Protection Register Map" on page 64).

The user-programmable Protection Registers contain one-time programmable (OTP) bits; when programmed, register bits cannot be erased. Each Protection Register can be accessed multiple times to program individual bits, as long as the register remains unlocked.

Each Protection Register has an associated Lock Register bit. When a Lock Register bit is programmed, the associated Protection Register can only be read; it can no longer be programmed. Additionally, because the Lock Register bits themselves are OTP, when programmed, Lock Register bits cannot be erased. Therefore, when a Protection Register is locked, it cannot be unlocked

Downloaded from Arrow.com.

Figure 29: Protection Register Map

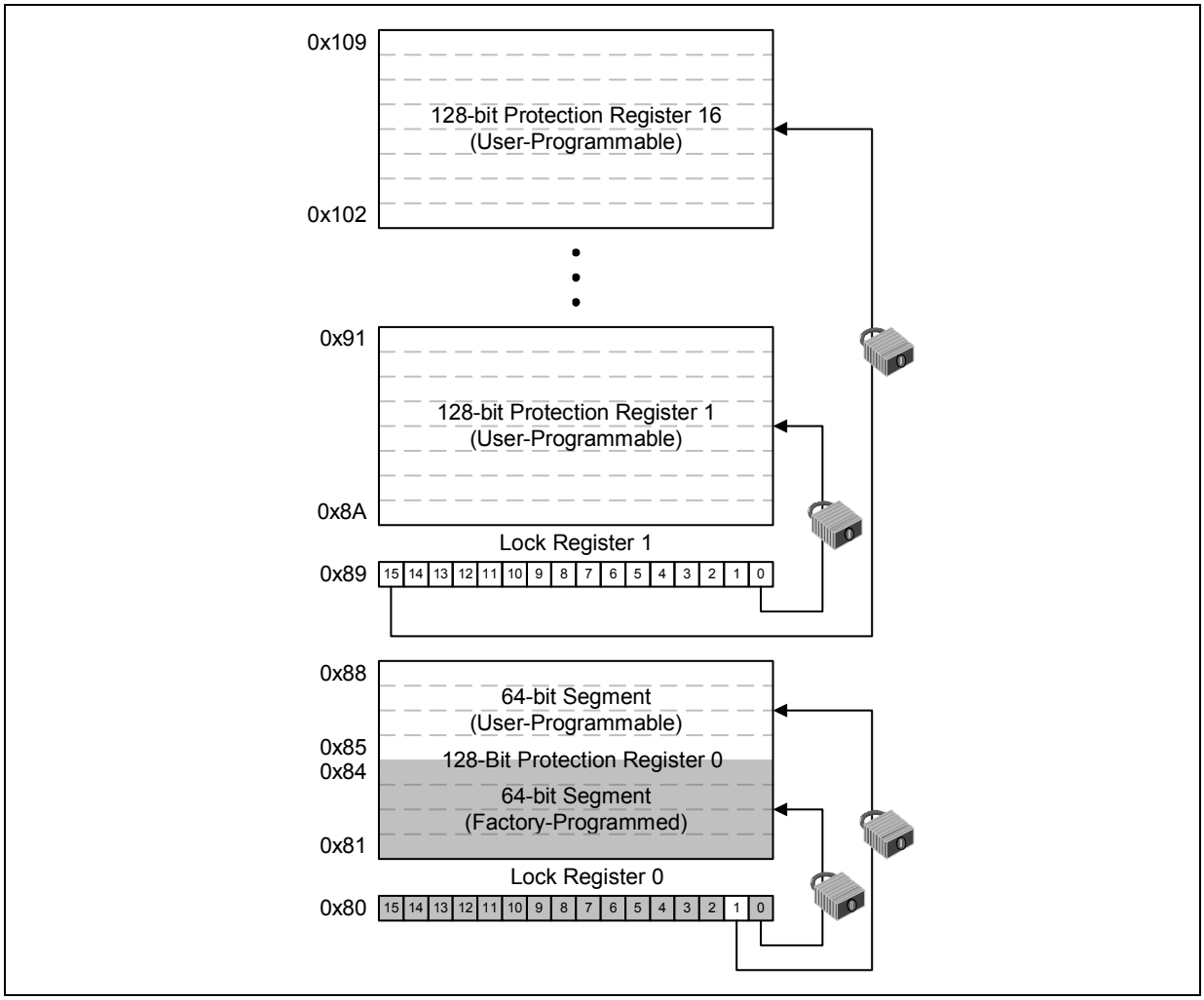

13.2.1 Reading the Protection Registers

The Protection Registers can be read from within any partition's address space. To read the Protection Register, first issue the Read Device Identifier command at any partitions' address to place that partition in the Read Device Identifier state (see Section 9.2, "Device Commands" on page 41). Next, perform a read operation at that partition's base address plus the address offset corresponding to the register to be read. Table 27, "Device Identifier Information" on page 71 shows the address offsets of the Protection Registers and Lock Registers. Register data is read 16 bits at a time.

Note: If a program or erase operation occurs within the device while it is reading a Protection Register, certain restrictions may apply. See Table 25, "Simultaneous Operation Restrictions" on page 69 for details.

Downloaded from Arrow.com.

13.2.2 Programming the Protection Registers

To program any of the Protection Registers, first issue the Program Protection Register command at the parameter partition's base address plus the offset to the desired Protection Register (see Section 9.2, "Device Commands" on page 41). Next, write the desired Protection Register data to the same Protection Register address (see Figure 29, "Protection Register Map" on page 64).

The device programs the 64-bit and 128-bit user-programmable Protection Register data 16 bits at a time (see Figure 46, "Protection Register Programming Flowchart" on page 87). Issuing the Program Protection Register command outside of the Protection Register's address space causes a program error (SR[4] set). Attempting to program a locked Protection Register causes a program error (SR[4] set) and a lock error (SR[1] set).

Note: If a program or erase operation occurs when programming a Protection Register, certain restrictions may apply. See Table 25, "Simultaneous Operation Restrictions" on page 69 for details.

13.2.3 Locking the Protection Registers

Each Protection Register can be locked by programming its respective lock bit in the Lock Register. To lock a Protection Register, program the corresponding bit in the Lock Register by issuing the Program Lock Register command, followed by the desired Lock Register data (see Section 9.2, "Device Commands" on page 41). The physical addresses of the Lock Registers are 0x80 for register 0 and 0x89 for register 1. These addresses are used when programming the lock registers (see Table 27, "Device Identifier Information" on page 71).

Bit 0 of Lock Register 0 is already programmed at the factory, locking the lower, pre-programmed 64-bit region of the first 128-bit Protection Register containing the unique identification number of the device. Bit 1 of Lock Register 0 can be programmed by the user to lock the user-programmable, 64-bit region of the first 128-bit Protection Register. The other bits in Lock Register 0 are not used.

Lock Register 1 controls the locking of the upper sixteen 128-bit Protection Registers. Each of the 16 bits of Lock Register 1 correspond to each of the upper sixteen 128-bit Protection Registers. Programming a bit in Lock Register 1 locks the corresponding 128-bit Protection Register.

Caution: **After being locked, the Protection Registers cannot be unlocked.**

Downloaded from Arrow.com.

14.0 Dual-Operation Considerations

The multi-partition architecture of the device allows background programming (or erasing) to occur in one partition while data reads (or code execution) take place in another partition.

14.1 Memory Partitioning

The L30 flash memory array is divided into multiple 8-Mbit partitions, which allows simultaneous read-while-write operations. Simultaneous program and erase is not allowed. Only one partition at a time can be in program or erase mode.

The flash device supports read-while-write operations with *bus cycle granularity* and not command granularity. In other words, it is *not* assumed that both bus cycles of a two cycle command (an erase command for example) will always occur as back to back bus cycles to the flash device. In practice, code fetches (reads) may be interspersed between write cycles to the flash device, and they will likely be directed to a different partition than the one being written. This is especially true when a processor is executing code from one partition that instructs the processor to program or erase in another partition.

14.2 Read-While-Write Command Sequences

When issuing commands to the device, a read operation can occur between 2-cycle Write command's (Figure 30, and Figure 31). However, a write operation issued between a 2-cycle commands write sequence causes a command sequence error. (See Figure 32)

When reading from the same partition after issuing a Setup command, Status Register data is returned, regardless of the read mode of the partition prior to issuing the Setup command.

.

Figure 30: Operating Mode with Correct Command Sequence Example

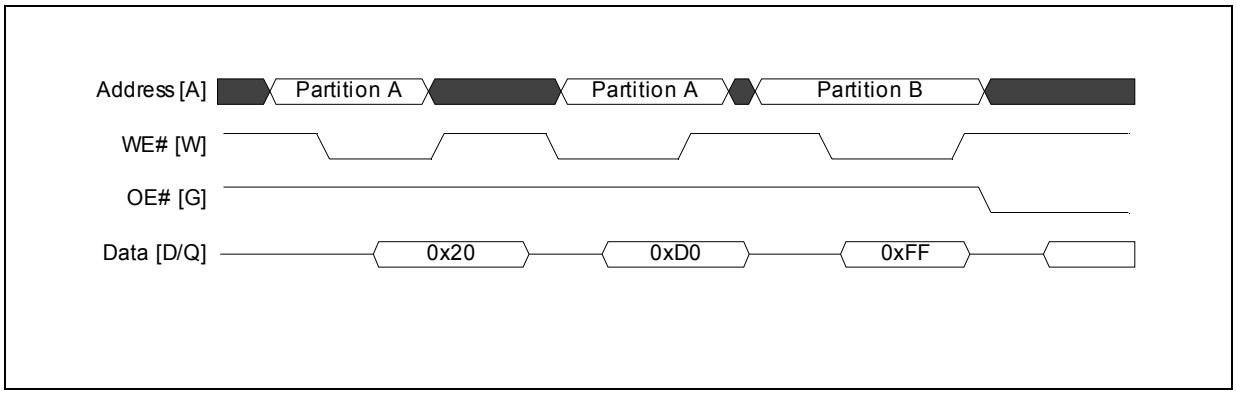

Downloaded from Arrow.com.

Figure 31: Operating Mode with Correct Command Sequence Example

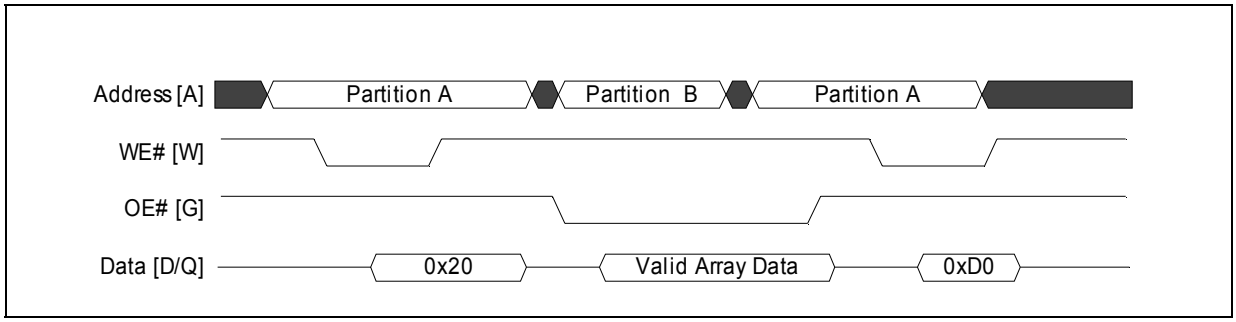

Figure 32: Operating Mode with Illegal Command Sequence Example

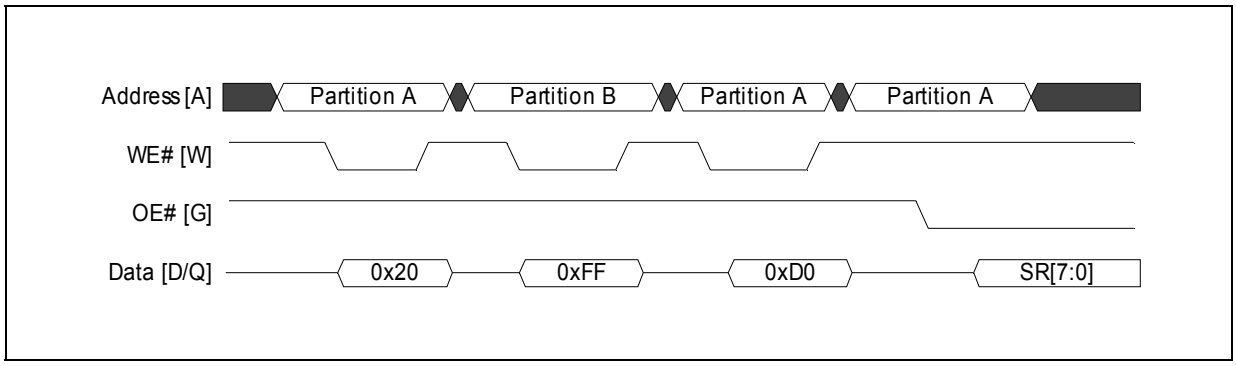

14.2.1 Simultaneous Operation Details

The Numonyx™ StrataFlash® Wireless Memory (L30) supports simultaneous read from one partition while programming or erasing in any other partition. Certain features like the Protection Registers and Query data have special requirements with respect to simultaneous operation capability. These will be detailed in the following sections.

14.2.2 Synchronous and Asynchronous RWW Characteristics and Waveforms

This section describes the transitions of write operation to asynchronous read, write to synchronous read, and write operation with clock active.

14.2.2.1 Write operation to asynchronous read transition

W18 - t_{WHAV}

The AC parameter W18 (t_{WHAV}-WE# High to Address Valid) is required when transitioning from a write cycle (WE# going high) to perform an asynchronous read (only address valid is required).

14.2.2.2 Write to synchronous read operation transition

W19 and W20 - t_{WHCV} and t_{WHVH}

Downloaded from Arrow.com.

The AC parameters W19 or W20 (t_{WHCV}-WE# High to Clock Valid, and t_{WHVH} - WE# High to ADV# High) is required when transitioning from a write cycle (WE# going high) to perform a synchronous burst read. A delay from WE# going high to a valid clock edge or ADV# going high to latch a new address must be met.

14.2.2.3 Write Operation with Clock Active

W21 - t_{VHWL}
W22 - t_{CHWL}

The AC parameters W21 (t_{VHWL}- ADV# High to WE# Low) and W22 (t_{CHWL} -Clock high to WE# low) are required when the device is in a synchronous mode and clock is active. A write bus cycle consists of two parts:

- the host provides an address to the flash device; and
- the host then provides data to the flash device.

The flash device in turn binds the received data with the received address. When operating synchronously (RCR[15] = 0), the address of a write cycle may be provided to the flash by the first active clock edge with ADV# low, or rising edge of ADV# as long as the applicable cycle separation conditions are met between each cycle.

If neither a clock edge nor a rising ADV# edge is used to provide a new address at the beginning of a write cycle (the clock is stopped and ADV# is low), the address may also be provided to the flash device by holding the address bus stable for the required amount of time (W5, t_{AVWH}) before the rising WE# edge.

Alternatively, the host may choose not to provide an address to the flash device during subsequent write cycles (if ADV# is high and only CE# or WE# is toggled to separate the prior cycle from the current write cycle). In this case, the flash device will use the most recently provided address from the host.

Refer to Figure 20, "Write to Asynchronous Read Timing" on page 34, Figure 21, "Synchronous Read to Write Timing" on page 35, and Figure 22, "Write to Synchronous Read Timing" on page 35, for representation of these timings.

14.2.3 Read Operation During Buffered Programming Flowchart

The multi-partition architecture of the device allows background programming (or erasing) to occur in one partition while data reads (or code execution) take place in another partition.

To perform a read while buffered programming operation, first issue a Buffered Program set up command in a partition. When a read operation occurs in the same partition after issuing a setup command, Status Register data will be returned, regardless of the read mode of the partition prior to issuing the setup command.

To read data from a block in other partition and the other partition already in read array mode, a new block address must be issued. However, if the other partition is ***not*** already in read array mode, issuing a read array command will cause the buffered program operation to abort and a command sequence error would be posted in the Status Register. See Figure 41, "Buffer Program Flowchart" on page 82 for more details.

Note: Simultaneous read-while-Buffered EFP is not supported.

Downloaded from Arrow.com.

14.3 Simultaneous Operation Restrictions

Since the Numonyx™ StrataFlash® Wireless Memory (L30) supports simultaneous read from one partition while programming or erasing in another partition, certain features like the Protection Registers and CFI Query data have special requirements with respect to simultaneous operation capability. (Table 25 provides details on restrictions during simultaneous operations.)

Table 25: Simultaneous Operation Restrictions

Protection Register or CFI data	Parameter Partition Array Data	Other Partitions	Notes
Read	(See Notes)	Write/Erase	While programming or erasing in a main partition, the Protection Register or CFI data may be read from any other partition. Reading the parameter partition array data is not allowed if the Protection Register or Query data is being read from addresses within the parameter partition.
(See Notes)	Read	Write/Erase	While programming or erasing in a main partition, read operations are allowed in the parameter partition. Accessing the Protection Registers or CFI data from parameter partition addresses is not allowed when reading array data from the parameter partition.
Read	Read	Write/Erase	While programming or erasing in a main partition, read operations are allowed in the parameter partition. Accessing the Protection Registers or CFI data in a partition that is *different* from the one being programed/erased, and also *different* from the parameter partition is allowed.
Write	No Access Allowed	Read	While programming the Protection Register, reads are only allowed in the other main partitions. Access to array data in the parameter partition is not allowed. Programming of the Protection Register can only occur in the parameter partition, which means this partition is in Read Status.
No Access Allowed	Write/Erase	Read	While programming or erasing the parameter partition, reads of the Protection Registers or CFI data are not allowed in *any* partition. Reads in partitions other than the parameter partition are supported.

Downloaded from Arrow.com.

15.0 Special Read States

The following sections describe non-array read states. Non-array reads can be performed in asynchronous read or synchronous burst mode. A non-array read operation occurs as asynchronous single-word mode. When non-array reads are performed in asynchronous page mode only the first data is valid and all subsequent data are undefined. When a non-array read operation occurs as synchronous burst mode, the same word of data requested will be output on successive clock edges until the burst length requirements are satisfied.

Each partition can be in one of its read states independent of other partitions' modes. See Figure 11, "Asynchronous Single-Word Read (ADV# Low)" on page 29, Figure 12, "Asynchronous Single-Word Read (ADV# Latch)" on page 29, and Figure 14, "Synchronous Single-Word Array or Non-array Read Timing" on page 30 for details.

15.1 Read Status Register

The status of any partition is determined by reading the Status Register from the address of that particular partition. To read the Status Register, issue the Read Status Register command within the desired partition's address range. Status Register information is available at the partition address to which the Read Status Register, Word Program, or Block Erase command was issued. Status Register data is automatically made available following a Word Program, Block Erase, or Block Lock command sequence. Reads from a partition after any of these command sequences outputs that partition's status until another valid command is written to that partition (e.g. Read Array command).

The Status Register is read using single asynchronous-mode or synchronous burst mode reads. Status Register data is output on DQ[7:0], while 0x00 is output on DQ[15:8]. In asynchronous mode the falling edge of OE#, or CE# (whichever occurs first) updates and latches the Status Register contents. However, reading the Status Register in synchronous burst mode, CE# or ADV# must be toggled to update status data. The Status Register read operations do not affect the read state of the other partitions.

The Device Write Status bit (SR[7]) provides overall status of the device. The Partition Status bit (SR[0]) indicates whether the addressed partition or some other partition is actively programming or erasing. Status register bits SR[6:1] present status and error information about the program, erase, suspend, V_{PP}, and block-locked operations.

Table 26: Status Register Description (Sheet 1 of 2)

Status Register (SR)							**Default Value = 0x80**
Device Write Status	Erase Suspend Status	Erase Status	Program Status	V_{PP} Status	Program Suspend Status	Block-Locked Status	Partition Status
DWS	ESS	ES	PS	VPPS	PSS	BLS	PWS
7	6	5	4	3	2	1	0

Bit	Name	Description
7	Device Write Status (DWS)	0 = Device is busy; program or erase cycle in progress; SR[0] valid. 1 = Device is ready; SR[6:1] are valid.
6	Erase Suspend Status (ESS)	0 = Erase suspend not in effect. 1 = Erase suspend in effect.
5	Erase Status (ES)	0 = Erase successful. 1 = Erase fail or program sequence error when set with SR[4,7].

Downloaded from Arrow.com.

Table 26: Status Register Description (Sheet 2 of 2)

Status Register (SR)		Default Value = 0x80
4	Program Status (PS)	0 = Program successful. 1 = Program fail or program sequence error when set with SR[5,7]
3	V_{PP} Status (VPPS)	0 = VPP within acceptable limits during program or erase operation. 1 = VPP < VPPLK during program or erase operation.
2	Program Suspend Status (PSS)	0 = Program suspend not in effect. 1 = Program suspend in effect.
1	Block-Locked Status (BLS)	0 = Block not locked during program or erase. 1 = Block locked during program or erase; operation aborted.
0	Partition Write Status (PWS)	DWS PWS 0 0 = Program or erase operation in addressed partition. 0 1 = Program or erase operation in other partition. 1 0 = No active program or erase operations. 1 1 = Reserved. (Non-buffered EFP operation. For Buffered EFP operation, see Section 11.3, "Buffered Enhanced Factory Programming" on page 55).

Always clear the Status Register prior to resuming erase operations. This avoids Status Register ambiguity when issuing commands during Erase Suspend. If a command sequence error occurs during an erase-suspend state, the Status Register contains the command sequence error status (SR[7,5,4] set). When the erase operation resumes and finishes, possible errors during the erase operation cannot be detected via the Status Register because it contains the previous error status.

15.1.1 Clear Status Register

The Clear Status Register command clears the status register, leaving all partition read states unchanged. It functions independent of V_{PP}. The Write State Machine (WSM) sets and clears SR[7,6,2,0], but it sets bits SR[5:3,1] without clearing them. The Status Register should be cleared before starting a command sequence to avoid any ambiguity. A device reset also clears the Status Register.

15.2 Read Device Identifier

The Read Device Identifier command instructs the addressed partition to output manufacturer code, device identifier code, block-lock status, protection register data, or configuration register data when that partition's addresses are read (see Section 9.2, "Device Commands" on page 41 for details on issuing the Read Device Identifier command). Table 27, "Device Identifier Information" on page 71 and Table 28, "Device ID codes" on page 72 show the address offsets and data values for this device.

Issuing a Read Device Identifier command to a partition that is programming or erasing places that partition in the Read Identifier state while the partition continues to program or erase in the background.

Table 27: Device Identifier Information (Sheet 1 of 2)

Item	Address(1,2)	Data
Manufacturer Code	PBA + 0x00	0089h
Device ID Code	PBA + 0x01	ID (see Table 28)

Downloaded from Arrow.com.

Table 27: Device Identifier Information (Sheet 2 of 2)

Item	Address(1,2)	Data
Block Lock Configuration: • Block Is Unlocked • Block Is Locked • Block Is not Locked-Down • Block Is Locked-Down	BBA + 0x02	Lock Bit: DQ_0 = 0b0 DQ_0 = 0b1 DQ_1 = 0b0 DQ_1 = 0b1
Configuration Register	PBA + 0x05	Configuration Register Data
Lock Register 0	PBA + 0x80	PR-LK0
64-bit Factory-Programmed Protection Register	PBA + 0x81–0x84	Factory Protection Register Data
64-bit User-Programmable Protection Register	PBA + 0x85–0x88	User Protection Register Data
Lock Register 1	PBA + 0x89	Protection Register Data
128-bit User-Programmable Protection Registers	PBA + 0x8A–0x109	PR-LK1

Notes:
1. PBA = Partition Base Address.
2. BBA = Block Base Address.

Table 28: Device ID codes

ID Code Type	Device Density	Device Identifier Codes	
		–T (Top Parameter)	–B (Bottom Parameter)
Device Code	128 Mbit	8812	8815
	256 Mbit	8813	8816

15.3 CFI Query

The CFI Query command instructs the device to output Common Flash Interface (CFI) data when partition addresses are read. See Section 9.2, "Device Commands" on page 41 for details on issuing the CFI Query command. Appendix C, "Common Flash Interface" on page 88 shows CFI information and address offsets within the CFI database.

Issuing the CFI Query command to a partition that is programming or erasing places that partition's outputs in the CFI Query state, while the partition continues to program or erase in the background.

The CFI Query command is subject to read restrictions dependent on parameter partition availability, as described in Table 25, "Simultaneous Operation Restrictions" on page 69.

Downloaded from Arrow.com.

Appendix A Write State Machine (WSM)

Figure 33 through Figure 38 show the command state transitions (Next State Table) based on incoming commands. Only one partition can be actively programming or erasing at a time. Each partition stays in its last read state (Read Array, Read Device ID, CFI Query or Read Status Register) until a new command changes it. The next WSM state does not depend on the partition's output state.

Figure 33: Write State Machine—Next State Table (Sheet 1 of 6)

		Command Input to Chip and resulting *Chip* Next State										
Current Chip State (7)		Read Array (2) (FFH)	Word Program (3,4) (10H/40H)	Buffered Program (BP) (E8H)	Erase Setup (3,4) (20H)	Buffered Enhanced Factory Pgm Setup (3, 4) (80H)	BE Confirm, P/E Resume, ULB, Confirm (8) (D0H)	BP / Prg / Erase Suspend (B0H)	Read Status (70H)	Clear Status Register (5) (50H)	Read ID/Query (90H, 98H)	Lock, Unlock, Lock-down, CR setup (4) (60H)
Ready		Ready	Program Setup	BP Setup	Erase Setup	BEFP Setup	Ready					Lock/CR Setup
Lock/CR Setup		Ready (Lock Error)					Ready (Unlock Block)	Ready (Lock Error)				
OTP	Setup	OTP Busy										
	Busy											
Word Program	Setup	Word Program Busy										
	Busy	Program Busy						Word Program Suspend	Word Program Busy			
	Suspend	Word Program Suspend					Word Program Busy	Word Program Suspend				
BP	Setup	BP Load 1										
	BP Load 1	BP Load 2										
	BP Load 2	BP Confirm if Data load into Program Buffer is complete; Else BP Load 2										
	BP Confirm	Ready (Error)					BP Busy	Ready (Error)				
	BP Busy	BP Busy						BP Suspend	BP Busy			
	BP Suspend	BP Suspend					BP Busy	BP Suspend				
Erase	Setup	Ready (Error)					Erase Busy	Ready (Error)				
	Busy	Erase Busy						Erase Suspend	Erase Busy			
	Suspend	Erase Suspend	Word Program Setup in Erase Suspend	BP Setup in Erase Suspend	Erase Suspend		Erase Busy	Erase Suspend				Lock/CR Setup in Erase Suspend

Downloaded from Arrow.com.

Figure 34: Write State Machine—Next State Table (Sheet 2 of 6)

Current Chip State (7)		Command Input to Chip and resulting *Chip* Next State										
		Read Array (2) (FFH)	Word Program (3,4) (10H/40H)	Buffered Program (BP) (E8H)	Erase Setup (3,4) (20H)	Buffered Enhanced Factory Pgm Setup (3, 4) (80H)	BE Confirm, P/E Resume, ULB, Confirm (8) (D0H)	BP / Prg / Erase Suspend (B0H)	Read Status (70H)	Clear Status Register (5) (50H)	Read ID/Query (90H, 98H)	Lock, Unlock, Lock-down, CR setup (4) (60H)
BP in Erase Suspend	Setup	BP Load 1										
	BP Load 1	BP Load 2										
	BP Load 2	BP Confirm if Data load into Program Buffer is complete; Else BP Load 2										
	BP Confirm	Erase Suspend (Error)					BP Busy in Erase Suspend	Ready (Error in Erase Suspend)				
	BP Busy	BP Busy in Erase Suspend						BP Suspend in Erase Suspend	BP Busy in Erase Suspend			
	BP Suspend	BP Suspend in Erase Suspend					BP Busy in Erase Suspend	BP Suspend in Erase Suspend				
Lock/CR Setup in Erase Suspend		Erase Suspend (Lock Error)					Erase Suspend (Unlock Block)	Erase Suspend (Lock Error [Botch])				
Buffered Enhanced Factory Program Mode	Setup	Ready (Error)					BEFP Loading Data (X=32)	Ready (Error)				
	BEFP Busy	BEFP Program and Verify Busy (if Block Address given matches address given on BEFP Setup command). Commands treated as data. (7)										

Downloaded from Arrow.com.

Figure 35: Write State Machine—Next State Table (Sheet 3 of 6)

Current Chip State (7)		Command Input to Chip and resulting *Chip* Next State						
		OTP Setup (4) (C0H)	Lock Block Confirm (8) (01H)	Lock-Down Block Confirm (8) (2FH)	Write RCR Confirm (8) (03H)	Block Address (?WA0) 9 (XXXXH)	Illegal Cmds or BEFP Data (1) (all other codes)	WSM Operation Completes
Ready		OTP Setup	Ready					N/A
Lock/CR Setup		Ready (Lock Error)	Ready (Lock Block)	Ready (Lock Down Blk)	Ready (Set CR)	Ready (Lock Error)		
OTP	Setup	OTP Busy						
	Busy							Ready
Word Program	Setup	Word Program Busy						N/A
	Busy	Word Program Busy						Ready
	Suspend	Word Program Suspend						N/A
BP	Setup	BP Load 1						
	BP Load 1	BP Load 2				Ready (BP Load 2	BP Load 2	
	BP Load 2	BP Confirm if Data load into Program Buffer is complete; ELSE BP load 2				Ready	BP Confirm if Data load into Program Buffer is complete; ELSE BP Load 2	
	BP Confirm	Ready (Error)				Ready (Error) (Proceed if unlocked or lock error)	Ready (Error)	
	BP Busy	BP Busy						Ready
	BP Suspend	BP Suspend						N/A
Erase	Setup	Ready (Error)						
	Busy	Erase Busy						Ready
	Suspend	Erase Suspend						N/A

Downloaded from Arrow.com.

Figure 36: Write State Machine—Next State Table (Sheet 4 of 6)

Current Chip State (7)		Command Input to Chip and resulting *Chip* Next State						
		OTP Setup (4) (C0H)	Lock Block Confirm (8) (01H)	Lock-Down Block Confirm (8) (2FH)	Write RCR Confirm (8) (03H)	Block Address (?WA0) 9 (XXXXH)	Illegal Cmds or BEFP Data (1) (all other codes)	WSM Operation Completes
Word Program in Erase Suspend	Setup	Word Program Busy in Erase Suspend						NA
	Busy	Word Program Busy in Erase Suspend Busy						Erase Suspend
	Suspend	Word Program Suspend in Erase Suspend						N/A
BP in Erase Suspend	Setup	BP Load 1						N/A
	BP Load 1	BP Load 2				Ready (BP Load 2	BP Load 2	
	BP Load 2	BP Confirm if Data load into Program Buffer is complete; Else BP Load 2				Ready	BP Confirm if Data load into Program Buffer is complete; Else BP Load 2	
	BP Confirm	Ready (Error in Erase Suspend)				Ready (Error) (Proceed if unlocked or lock error)	Ready (Error)	
	BP Busy	BP Busy in Erase Suspend						Erase Suspend
	BP Suspend	BP Suspend in Erase Suspend						N/A
Lock/CR Setup in Erase Suspend		Erase Suspend (Lock Error)	Erase Suspend (Lock Block)	Erase Suspend (Lock Down Block)	Erase Suspend (Set CR)	Erase Suspend (Lock Error)		
Buffered Enhanced Factory Program Mode	Setup	Ready (Error)				Ready (BEFP Loading Data)	Ready (Error)	
	BEFP Busy	BEFP Program and Verify Busy (if Block Address given matches address given on BEFP Setup command). Commands treated as data. (7)				Ready	BEFP Busy	Ready

Downloaded from Arrow.com.

Figure 37: Write State Machine—Next State Table (Sheet 5 of 6)

Output Next State Table

	Command Input to Chip and resulting *Output* Mux Next State										
Current chip state	Read Array [2] (FFH)	Word Program Setup (3,4) (10H/40H)	BP Setup (E8H)	Erase Setup [3,4] (20H)	Buffered Enhanced Factory Pgm Setup [3, 4] (30H)	BE Confirm, P/E Resume, ULB Confirm [8] (D0H)	Program/ Erase Suspend (B0H)	Read Status (70H)	Clear Status Register [5] (50H)	Read ID/Query (90H, 98H)	Lock, Unlock, Lock-down, CR setup [4] (60H)
BEFP Setup, BEFP Pgm & Verify Busy, Erase Setup, OTP Setup, BP: Setup, Load 1, Load 2, Confirm, Word Pgm Setup, Word Pgm Setup in Erase Susp, BP Setup, Load1, Load 2, Confirm in Erase Suspend	Status Read										
Lock/CR Setup, Lock/CR Setup in Erase Susp	Status Read										
OTP Busy	Read Array	Status Read				Output does not change.		Status Read	Output mux does not change.	Status Read	Status Read
Ready, Erase Suspend, BP Suspend, BP Busy, Word Program Busy, Erase Busy, BP Busy, BP Busy in Erase Suspend, Word Pgm Suspend, Word Pgm Busy in Erase Suspend, Pgm Suspend In Erase Suspend										ID Read	

Downloaded from Arrow.com.

Figure 38: Write State Machine—Next State Table (Sheet 6 of 6)

Output Next State Table

Current chip state	Command Input to Chip and resulting *Output* Mux Next State						
	OTP Setup [4] (C0H)	Lock Block Confirm [8] (01H)	Lock-Down Block Confirm [8] (2FH)	Write CR Confirm [8] (03H)	Block Address (?WA0) (FFFFH)	Illegal Cmds or BEFP Data [1] (all other codes)	WSM Operation Completes
BEFP Setup, BEFP Pgm & Verify Busy, Erase Setup, OTP Setup, BP: Setup, Load 1, Load 2, Confirm, Word Pgm Setup, Word Pgm Setup in Erase Susp, BP Setup, Load1, Load 2, Confirm in Erase Suspend	Status Read						Output does not change.
Lock/CR Setup, Lock/CR Setup in Erase Susp	Status Read			Array Read	Status Read		
OTP Busy	Status Read	Output does not change.			Array Read	Output does not change.	
Ready, Erase Suspend, BP Suspend BP Busy, Word Program Busy, Erase Busy, BP Busy BP Busy in Erase Suspend Word Pgm Suspend, Word Pgm Busy in Erase Suspend, Pgm Suspend In Erase Suspend							

Notes:

1. "Illegal commands" include commands outside of the allowed command set (allowed commands: 40H [pgm], 20H [erase], etc.)
2. If a "Read Array" is attempted from a busy partition, the result will be invalid data. The ID and Query data are located at different locations in the address map.
3. 1st and 2nd cycles of "2 cycles write commands" must be given to the same partition address, or unexpected results will occur.
4. To protect memory contents against erroneous command sequences, there are specific instances in a multi-cycle command sequence in which the second cycle will be ignored. For example, when the device is program suspended and an erase setup command (0x20) is given followed by a confirm/resume command (0xD0), the second command will be ignored because it is unclear whether the user intends to erase the block or resume the program operation.
5. The Clear Status command only clears the error bits in the status register if the device is not in the following modes: WSM running (Pgm Busy, Erase Busy, Pgm Busy In Erase Suspend, OTP Busy, BEFP modes).

Downloaded from Arrow.com.

6. BEFP writes are only allowed when the status register bit #0 = 0, or else the data is ignored.
7. The "current state" is that of the "chip" and not of the "partition"; Each partition "remembers" which output (Array, ID/CFI or Status) it was last pointed to on the last instruction to the "chip", but the next state of the chip does not depend on where the partition's output mux is presently pointing to.
8. Confirm commands (Lock Block, Unlock Block, Lock-Down Block, Configuration Register) perform the operation and then move to the Ready State.
9. WA0 refers to the block address latched during the first write cycle of the current operation.

Downloaded from Arrow.com.

Appendix B Flowcharts

Figure 39: Word Program Flowchart

WORD PROGRAM PROCEDURE

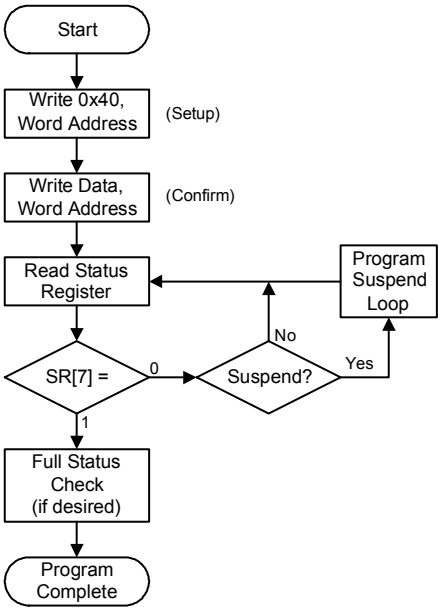

Bus Operation	Command	Comments
Write	Program Setup	Data = 0x40 Addr = Location to program
Write	Data	Data = Data to program Addr = Location to program
Read	None	Status register data
Idle	None	Check SR[7] 1 = WSM Ready 0 = WSM Busy

Repeat for subsequent Word Program operations.

Full Status Register check can be done after each program, or after a sequence of program operations.

Write 0xFF after the last operation to set to the Read Array state.

FULL STATUS CHECK PROCEDURE

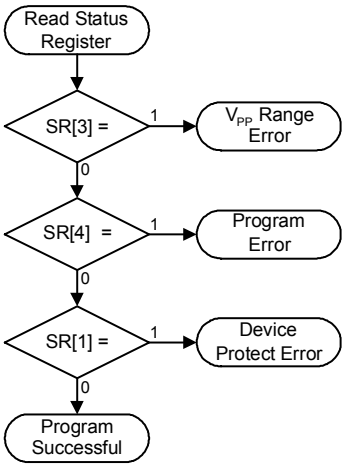

Bus Operation	Command	Comments
Idle	None	Check SR[3]: 1 = V_{PP} Error
Idle	None	Check SR[4]: 1 = Data Program Error
Idle	None	Check SR[1]: 1 = Block locked; operation aborted

If an error is detected, clear the Status Register before continuing operations - only the Clear Staus Register command clears the Status Register error bits.

Downloaded from Arrow.com.

Figure 40: Program Suspend/Resume Flowchart

PROGRAM SUSPEND / RESUME PROCEDURE

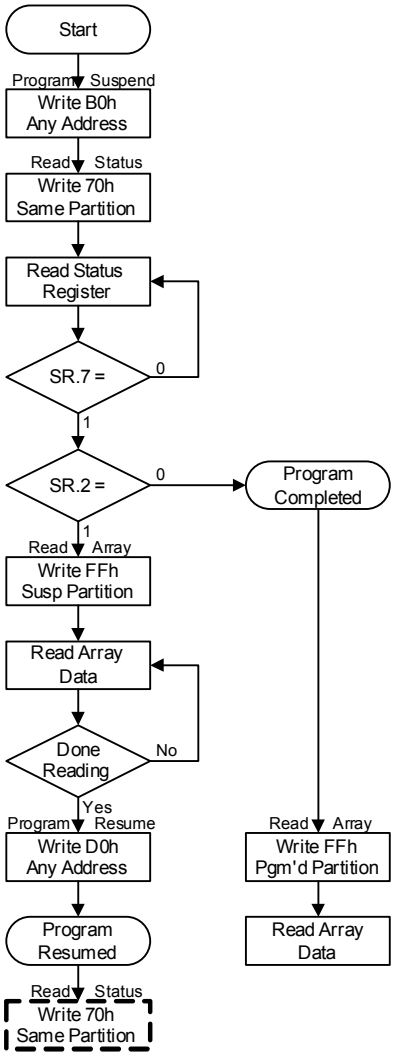

Bus Operation	Command	Comments
Write	Program Suspend	Data = B0h Addr = Block to suspend (BA)
Write	Read Status	Data = 70h Addr = Same partition
Read		Status register data Addr = Suspended block (BA)
Standby		Check SR.7 1 = WSM ready 0 = WSM busy
Standby		Check SR.2 1 = Program suspended 0 = Program completed
Write	Read Array	Data = FFh Addr = Any address within the suspended partition
Read		Read array data from block other than the one being programmed
Write	Program Resume	Data = D0h Addr = Suspended block (BA)

If the suspended partition was placed in Read Array mode:

Write	Read Status	Return partition to Status mode: Data = 70h Addr = Same partition

PGM_SUS.WMF

Downloaded from Arrow.com.

Figure 41: Buffer Program Flowchart

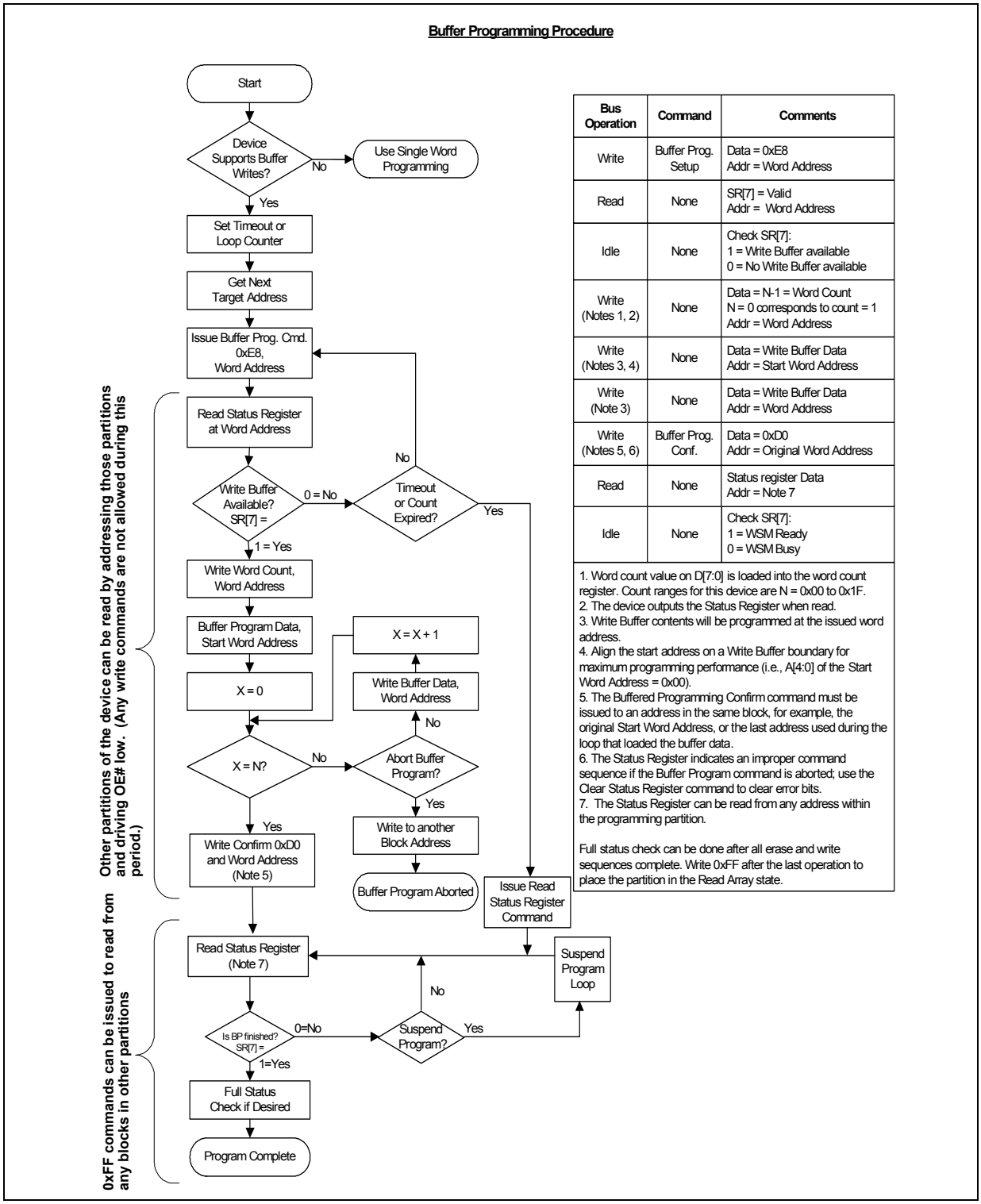

Bus Operation	Command	Comments
Write	Buffer Prog. Setup	Data = 0xE8 Addr = Word Address
Read	None	SR[7] = Valid Addr = Word Address
Idle	None	Check SR[7]: 1 = Write Buffer available 0 = No Write Buffer available
Write (Notes 1, 2)	None	Data = N-1 = Word Count N = 0 corresponds to count = 1 Addr = Word Address
Write (Notes 3, 4)	None	Data = Write Buffer Data Addr = Start Word Address
Write (Note 3)	None	Data = Write Buffer Data Addr = Word Address
Write (Notes 5, 6)	Buffer Prog. Conf.	Data = 0xD0 Addr = Original Word Address
Read	None	Status register Data Addr = Note 7
Idle	None	Check SR[7]: 1 = WSM Ready 0 = WSM Busy

1. Word count value on D[7:0] is loaded into the word count register. Count ranges for this device are N = 0x00 to 0x1F.
2. The device outputs the Status Register when read.
3. Write Buffer contents will be programmed at the issued word address.
4. Align the start address on a Write Buffer boundary for maximum programming performance (i.e., A[4:0] of the Start Word Address = 0x00).
5. The Buffered Programming Confirm command must be issued to an address in the same block, for example, the original Start Word Address, or the last address used during the loop that loaded the buffer data.
6. The Status Register indicates an improper command sequence if the Buffer Program command is aborted; use the Clear Status Register command to clear error bits.
7. The Status Register can be read from any address within the programming partition.

Full status check can be done after all erase and write sequences complete. Write 0xFF after the last operation to place the partition in the Read Array state.

Downloaded from Arrow.com.

Figure 42: Buffered EFP Flowchart

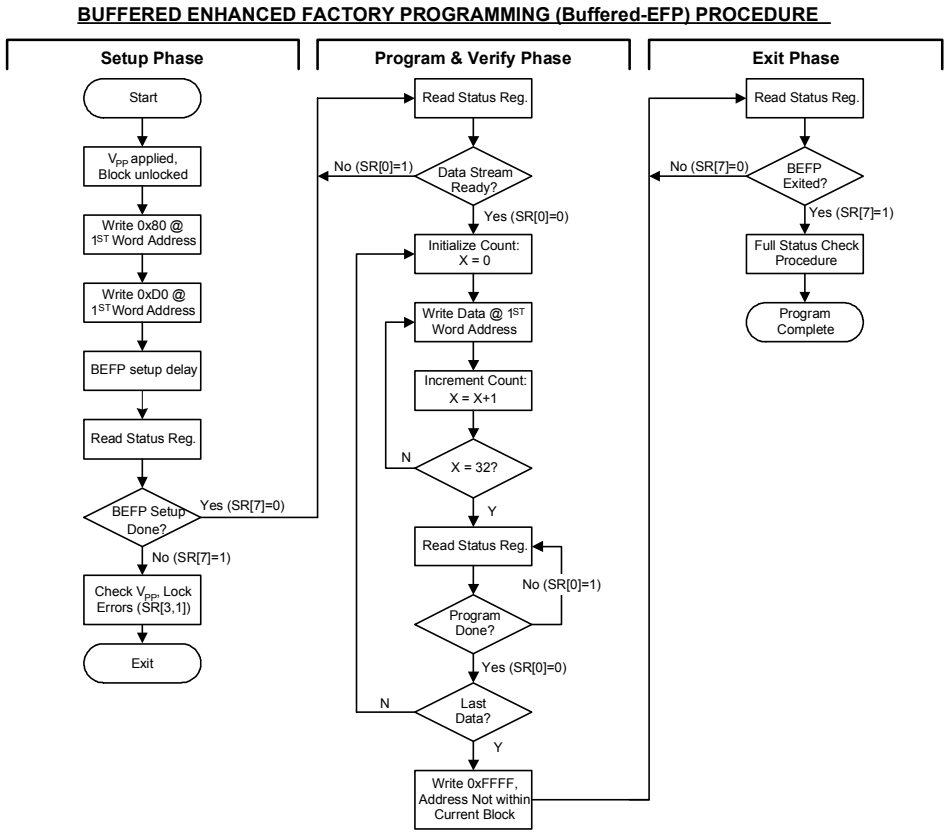

BEFP Setup

Bus State	Operation	Comments
Write	Unlock Block	V_{PPH} applied to VPP
Write (Note 1)	BEFP Setup	Data = 0x80 @ 1ST Word Address
Write	BEFP Confirm	Data = 0xD0 @ 1ST Word Address[1]
Read	Status Register	Data = Status Reg. Data Address = 1ST Word Addr
Standby	BEFP Setup Done?	Check SR[7]: 0 = BEFP Ready 1 = BEFP Not Ready
Standby	Error Condition Check	If SR[7] is set, check: SR[3] set = V_{PP} Error SR[1] set = Locked Block

BEFP Program & Verify

Bus State	Operation	Comments
Read	Status Register	Data = Status Register Data Address = 1ST Word Addr.
Standby	Data Stream Ready?	Check SR[0]: 0 = Ready for Data 1 = Not Ready for Data
Standby	Initialize Count	X = 0
Write (Note 2)	Load Buffer	Data = Data to Program Address = 1ST Word Addr.
Standby	Increment Count	X = X+1
Standby	Buffer Full?	X = 32? Yes = Read SR[0] No = Load Next Data Word
Read	Status Register	Data = Status Reg. data Address = 1ST Word Addr.
Standby	Program Done?	Check SR[0]: 0 = Program Done 1 = Program in Progress
Standby	Last Data?	No = Fill buffer again Yes = Exit
Write	Exit Prog & Verify Phase	Data = 0xFFFF @ address not in current block

BEFP Exit

Bus State	Operation	Comments
Read	Status Register	Data = Status Reg. Data Address = 1ST Word Addr
Standby	Check Exit Status	Check SR[7]: 0 = Exit Not Completed 1 = Exit Completed
Repeat for subsequent blocks; After BEFP exit, a full Status Register check can determine if any program error occurred; See full Status Register check procedure in the Word Program flowchart. Write 0xFF to enter Read Array state.		

NOTES:
1. First-word address to be programmed within the target block must be aligned on a write-buffer boundary.
2. Write-buffer contents are programmed sequentially to the flash array starting at the first word address. WSM internally increments addressing.

Downloaded from Arrow.com.

Figure 43: Block Erase Flowchart

BLOCK ERASE PROCEDURE

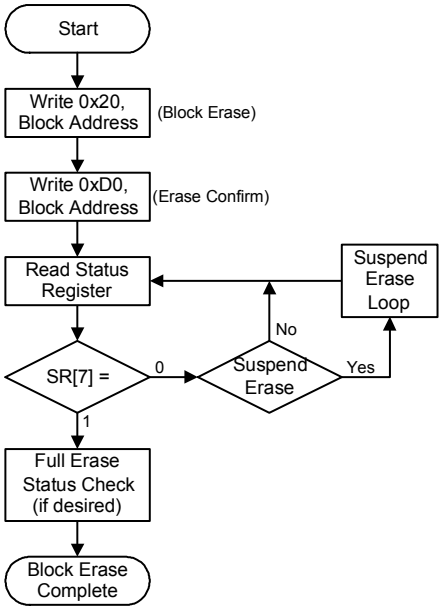

Bus Operation	Command	Comments
Write	Block Erase Setup	Data = 0x20 Addr = Block to be erased (BA)
Write	Erase Confirm	Data = 0xD0 Addr = Block to be erased (BA)
Read	None	Status Register data.
Idle	None	Check SR[7]: 1 = WSM ready 0 = WSM busy

Repeat for subsequent block erasures.

Full Status register check can be done after each block erase or after a sequence of block erasures.

Write 0xFF after the last operation to enter read array mode.

FULL ERASE STATUS CHECK PROCEDURE

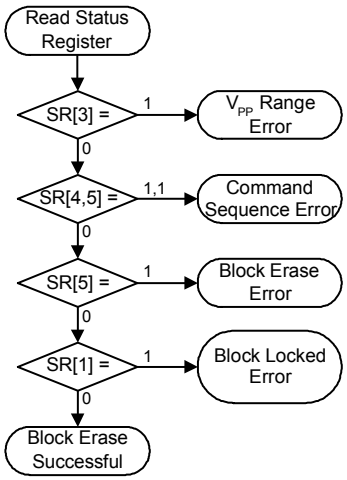

Bus Operation	Command	Comments
Idle	None	Check SR[3]: 1 = V_{PP} Range Error
Idle	None	Check SR[4,5]: Both 1 = Command Sequence Error
Idle	None	Check SR[5]: 1 = Block Erase Error
Idle	None	Check SR[1]: 1 = Attempted erase of locked block; erase aborted.

Only the Clear Status Register command clears SR[1, 3, 4, 5].

If an error is detected, clear the Status register before attempting an erase retry or other error recovery.

Downloaded from Arrow.com.

Figure 44: Erase Suspend/Resume Flowchart

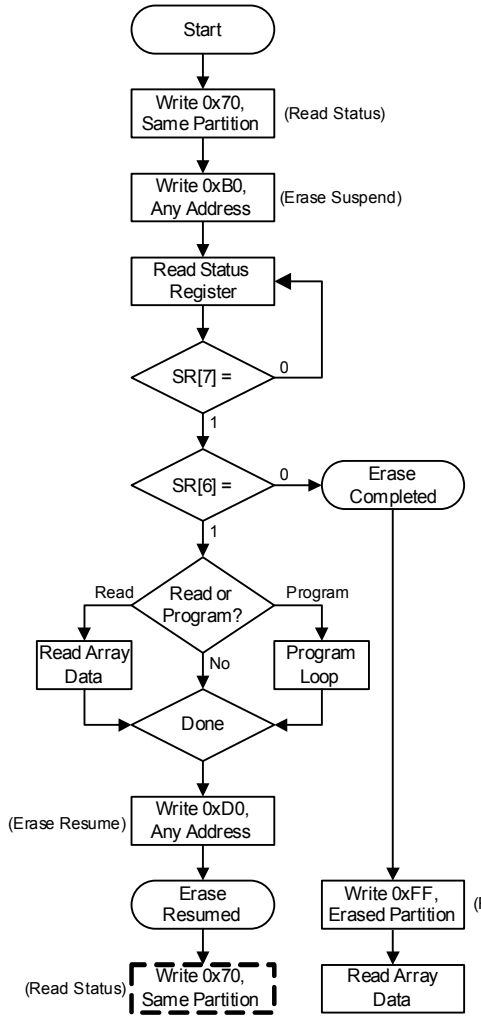

Bus Operation	Command	Comments
Write	Read Status	Data = 0x70 Addr = Any partition address
Write	Erase Suspend	Data = 0xB0 Addr = Same partition address as above
Read	None	Status Register data. Addr = Same partition
Idle	None	Check SR[7]: 1 = WSM ready 0 = WSM busy
Idle	None	Check SR[6]: 1 = Erase suspended 0 = Erase completed
Write	Read Array or Program	Data = 0xFF or 0x40 Addr = Any address within the suspended partition
Read or Write	None	Read array or program data from/to block other than the one being erased
Write	Program Resume	Data = 0xD0 Addr = Any address

If the suspended partition was placed in Read Array mode or a Program Loop:

Write	Read Status Register	Return partition to Status mode: Data = 0x70 Addr = Same partition

Downloaded from Arrow.com.

Figure 45: Block Lock Operations Flowchart

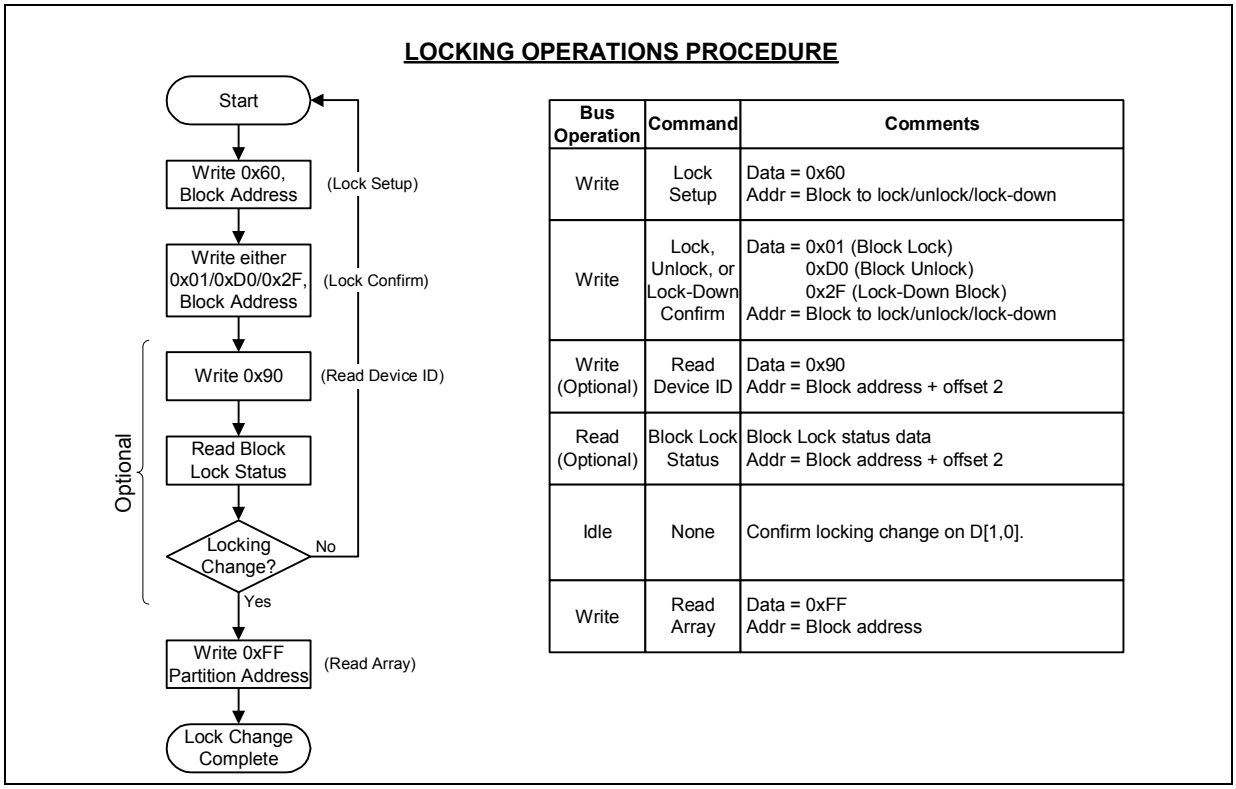

Bus Operation	Command	Comments
Write	Lock Setup	Data = 0x60 Addr = Block to lock/unlock/lock-down
Write	Lock, Unlock, or Lock-Down Confirm	Data = 0x01 (Block Lock) 0xD0 (Block Unlock) 0x2F (Lock-Down Block) Addr = Block to lock/unlock/lock-down
Write (Optional)	Read Device ID	Data = 0x90 Addr = Block address + offset 2
Read (Optional)	Block Lock Status	Block Lock status data Addr = Block address + offset 2
Idle	None	Confirm locking change on D[1,0].
Write	Read Array	Data = 0xFF Addr = Block address

Downloaded from Arrow.com.

Figure 46: Protection Register Programming Flowchart

PROTECTION REGISTER PROGRAMMING PROCEDURE

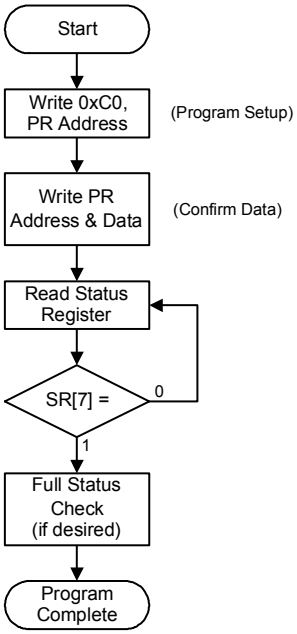

Bus Operation	Command	Comments
Write	Program PR Setup	Data = 0xC0 Addr = First Location to Program
Write	Protection Program	Data = Data to Program Addr = Location to Program
Read	None	Status Register Data.
Idle	None	Check SR[7]: 1 = WSM Ready 0 = WSM Busy

Program Protection Register operation addresses must be within the Protection Register address space. Addresses outside this space will return an error.

Repeat for subsequent programming operations.

Full Status Register check can be done after each program, or after a sequence of program operations.

Write 0xFF after the last operation to set Read Array state.

FULL STATUS CHECK PROCEDURE

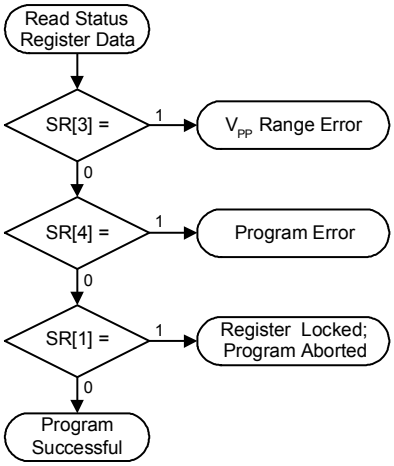

Bus Operation	Command	Comments
Idle	None	Check SR[3]: 1 =V_{PP} Range Error
Idle	None	Check SR[4]: 1 =Programming Error
Idle	None	Check SR[1]: 1 =Block locked; operation aborted

Only the Clear Staus Register command clears SR[1, 3, 4].

If an error is detected, clear the Status register before attempting a program retry or other error recovery.

Downloaded from Arrow.com.

Appendix C Common Flash Interface

The Common Flash Interface (CFI) is part of an overall specification for multiple command-set and control-interface descriptions. This appendix describes the database structure containing the data returned by a read operation after issuing the CFI Query command (see Section 9.2, "Device Commands" on page 41). System software can parse this database structure to obtain information about the flash device, such as block size, density, bus width, and electrical specifications. The system software will then know which command set(s) to use to properly perform flash writes, block erases, reads and otherwise control the flash device.

C.1 Query Structure Output

The Query database allows system software to obtain information for controlling the flash device. This section describes the device's CFI-compliant interface that allows access to Query data.

Query data are presented on the lowest-order data outputs (DQ_{7-0}) only. The numerical offset value is the address relative to the maximum bus width supported by the device. On this family of devices, the Query table device starting address is a 10h, which is a word address for x16 devices.

For a word-wide (x16) device, the first two Query-structure bytes, ASCII "Q" and "R," appear on the low byte at word addresses 10h and 11h. This CFI-compliant device outputs 00h data on upper bytes. The device outputs ASCII "Q" in the low byte (DQ_{7-0}) and 00h in the high byte (DQ_{15-8}).

At Query addresses containing two or more bytes of information, the least significant data byte is presented at the lower address, and the most significant data byte is presented at the higher address.

In all of the following tables, addresses and data are represented in hexadecimal notation, so the "h" suffix has been dropped. In addition, since the upper byte of word-wide devices is always "00h," the leading "00" has been dropped from the table notation and only the lower byte value is shown. Any x16 device outputs can be assumed to have 00h on the upper byte in this mode.

Table 29: Summary of Query Structure Output as a Function of Device and Mode

Device	Hex Offset	Hex Code	ASCII Value
Device Addresses	00010:	51	"Q"
	00011:	52	"R"
	00012:	59	"Y"

Downloaded from Arrow.com.

Table 30: Example of Query Structure Output of x16- Devices

Word Addressing:			Byte Addressing:		
Offset	**Hex Code**	**Value**	**Offset**	**Hex Code**	**Value**
A_X–A_0	D_{15}–D_0		A_X–A_0	D_7–D_0	
00010h	0051	"Q"	00010h	51	"Q"
00011h	0052	"R"	00011h	52	"R"
00012h	0059	"Y"	00012h	59	"Y"
00013h	P_ID_{LO}	PrVendor	00013h	P_ID_{LO}	PrVendor
00014h	P_ID_{HI}	ID #	00014h	P_ID_{LO}	ID #
00015h	P_{LO}	PrVendor	00015h	P_ID_{HI}	ID #
00016h	P_{HI}	TblAdr	00016h	...	...
00017h	A_ID_{LO}	AltVendor	00017h		
00018h	A_ID_{HI}	ID #	00018h		
...	...	...	...		

C.2 Query Structure Overview

The Query command causes the flash component to display the Common Flash Interface (CFI) Query structure or "database." The structure sub-sections and address locations are summarized below.

Table 31: Query Structure

Offset	Sub-Section Name	Description[1]
00001-Fh	Reserved	Reserved for vendor-specific information
00010h	CFI query identification string	Command set ID and vendor data offset
0001Bh	System interface information	Device timing & voltage information
00027h	Device geometry definition	Flash device layout
P[3]	Primary Intel-specific Extended Query Table	Vendor-defined additional information specific

Notes:

1. Refer to the Query Structure Output section and offset 28h for the detailed definition of offset address as a function of device bus width and mode.
2. BA = Block Address beginning location (i.e., 08000h is block 1's beginning location when the block size is 16-Kword).
3. Offset 15 defines "P" which points to the Primary Numonyx-specific Extended Query Table.

C.3 CFI Query Identification String

The Identification String provides verification that the component supports the Common Flash Interface specification. It also indicates the specification version and supported vendor-specified command set(s).

Downloaded from Arrow.com.

Table 32: CFI Identification

Offset	Length	Description	Add.	Hex Code	Value
10h	3	Query-unique ASCII string "QRY"	10: 11: 12:	--51 --52 --59	"Q" "R" "Y"
13h	2	Primary vendor command set and control interface ID code. 16-bit ID code for vendor-specified algorithms	13: 14:	--01 --00	
15h	2	Extended Query Table primary algorithm address	15: 16:	--0A --01	
17h	2	Alternate vendor command set and control interface ID code. 0000h means no second vendor-specified algorithm exists	17: 18:	--00 --00	
19h	2	Secondary algorithm Extended Query Table address. 0000h means none exists	19: 1A:	--00 --00	

Table 33: System Interface Information

Offset	Length	Description	Add.	Hex Code	Value
1Bh	1	V_{CC} logic supply minimum program/erase voltage bits 0–3 BCD 100 mV bits 4–7 BCD volts	1B:	--17	1.7V
1Ch	1	V_{CC} logic supply maximum program/erase voltage bits 0–3 BCD 100 mV bits 4–7 BCD volts	1C:	--20	2.0V
1Dh	1	V_{PP} [programming] supply minimum program/erase voltage bits 0–3 BCD 100 mV bits 4–7 HEX volts	1D:	--85	8.5V
1Eh	1	V_{PP} [programming] supply maximum program/erase voltage bits 0–3 BCD 100 mV bits 4–7 HEX volts	1E:	--95	9.5V
1Fh	1	"n" such that typical single word program time-out = 2^n µ-sec	1F:	--08	256µs
20h	1	"n" such that typical max. buffer write time-out = 2^n µ-sec	20:	--09	512µs
21h	1	"n" such that typical block erase time-out = 2^n m-sec	21:	--0A	1s
22h	1	"n" such that typical full chip erase time-out = 2^n m-sec	22:	--00	NA
23h	1	"n" such that maximum word program time-out = 2^n times typical	23:	--01	512µs
24h	1	"n" such that maximum buffer write time-out = 2^n times typical	24:	--01	1024µs
25h	1	"n" such that maximum block erase time-out = 2^n times typical	25:	--02	4s
26h	1	"n" such that maximum chip erase time-out = 2^n times typical	26:	--00	NA

Downloaded from Arrow.com.

C.4 Device Geometry Definition

Table 34: Device Geometry Definition

Offset	Length	Description	Code		
27h	1	"n" such that device size = 2^n in number of bytes	27:	See table below	
28h	2	Flash device interface code assignment: "n" such that n+1 specifies the bit field that represents the flash device width capabilities as described in the table: 7 6 5 4 3 2 1 0 — — — — x64 x32 x16 x8 15 14 13 12 11 10 9 8 — — — — — — — —	28: 29:	--01 --00	x16
2Ah	2	"n" such that maximum number of bytes in write buffer = 2^n	2A: 2B:	--06 --00	64
2Ch	1	Number of erase block regions (x) within device: 1. x = 0 means no erase blocking; the device erases in bulk 2. x specifies the number of device regions with one or more contiguous same-size erase blocks. 3. Symmetrically blocked partitions have one blocking region	2C:	See table below	
2Dh	4	Erase Block Region 1 Information bits 0–15 = y, y+1 = number of identical-size erase blocks bits 16–31 = z, region erase block(s) size are z x 256 bytes	2D: 2E: 2F: 30:	See table below	
31h	4	Erase Block Region 2 Information bits 0–15 = y, y+1 = number of identical-size erase blocks bits 16–31 = z, region erase block(s) size are z x 256 bytes	31: 32: 33: 34:	See table below	
35h	4	Reserved for future erase block region information	35: 36: 37: 38:	See table below	

Address	64 Mbit		128 Mbit		256 Mbit	
	–B	–T	–B	–T	–B	–T
27:	--17	--17	--18	--18	--19	--19
28:	--01	--01	--01	--01	--01	--01
29:	--00	--00	--00	--00	--00	--00
2A:	--06	--06	--06	--06	--06	--06
2B:	--00	--00	--00	--00	--00	--00
2C:	--02	--02	--02	--02	--02	--02
2D:	--03	--3E	--03	--7E	--03	--FE
2E:	--00	--00	--00	--00	--00	--00
2F:	--80	--00	--80	--00	--80	--00
30:	--00	--02	--00	--02	--00	--02
31:	--3E	--03	--7E	--03	--FE	--03
32:	--00	--00	--00	--00	--00	--00
33:	--00	--80	--00	--80	--00	--80
34:	--02	--00	--02	--00	--02	--00
35:	--00	--00	--00	--00	--00	--00
36:	--00	--00	--00	--00	--00	--00
37:	--00	--00	--00	--00	--00	--00
38:	--00	--00	--00	--00	--00	--00

Downloaded from Arrow.com.

C.5 Numonyx-Specific Extended Query Table

Table 35: Primary Vendor-Specific Extended Query

Offset[1] P = 10Ah	Length	Description (Optional flash features and commands)	Add.	Hex Code	Value
(P+0)h	3	Primary extended query table	10A	--50	"P"
(P+1)h		Unique ASCII string "PRI"	10B:	--52	"R"
(P+2)h			10C:	--49	"I"
(P+3)h	1	Major version number, ASCII	10D:	--31	"1"
(P+4)h	1	Minor version number, ASCII	10E:	--33	"3"
(P+5)h	4	Optional feature and command support (1=yes, 0=no)	10F:	--E6	
(P+6)h		*bits 10–31 are reserved; undefined bits are "0." If bit 31 is*	110:	--03	
(P+7)h		*"1" then another 31 bit field of Optional features follows at*	111:	--00	
(P+8)h		*the end of the bit–30 field.*	112:	--00	
		bit 0 Chip erase supported	bit 0	= 0	No
		bit 1 Suspend erase supported	bit 1	= 1	Yes
		bit 2 Suspend program supported	bit 2	= 1	Yes
		bit 3 Legacy lock/unlock supported	bit 3	= 0	No
		bit 4 Queued erase supported	bit 4	= 0	No
		bit 5 Instant individual block locking supported	bit 5	= 1	Yes
		bit 6 Protection bits supported	bit 6	= 1	Yes
		bit 7 Pagemode read supported	bit 7	= 1	Yes
		bit 8 Synchronous read supported	bit 8	= 1	Yes
		bit 9 Simultaneous operations supported	bit 9	= 1	Yes
(P+9)h	1	Supported functions after suspend: read Array, Status, Query	113:	--01	
		Other supported operations are:			
		bits 1–7 reserved; undefined bits are "0"			
		bit 0 Program supported after erase suspend	bit 0	= 1	Yes
(P+A)h	2	Block status register mask	114:	--03	
(P+B)h		*bits 2–15 are Reserved; undefined bits are "0"*	115:	--00	
		bit 0 Block Lock-Bit Status register active	bit 0	= 1	Yes
		bit 1 Block Lock-Down Bit Status active	bit 1	= 1	Yes
(P+C)h	1	V_{CC} logic supply highest performance program/erase voltage	116:	--18	1.8V
		bits 0–3 BCD value in 100 mV			
		bits 4–7 BCD value in volts			
(P+D)h	1	V_{PP} optimum program/erase supply voltage	117:	--90	9.0V
		bits 0–3 BCD value in 100 mV			
		bits 4–7 HEX value in volts			

Downloaded from Arrow.com.

Table 36: Protection Register Information

Offset[1] P = 10Ah	Length	Description (Optional flash features and commands)	Add.	Hex Code	Value
(P+E)h	1	Number of Protection register fields in JEDEC ID space. "00h," indicates that 256 protection fields are available	118:	--02	2
(P+F)h	4	Protection Field 1: Protection Description	119:	--80	80h
(P+10)h		This field describes user-available One Time Programmable	11A:	--00	00h
(P+11)h		(OTP) Protection register bytes. Some are pre-programmed	11B:	--03	8 byte
(P+12)h		with device-unique serial numbers. Others are user	11C:	--03	8 byte
		programmable. Bits 0–15 point to the Protection register Lock byte, the section's first byte. The following bytes are factory pre-programmed and user-programmable.			
		bits 0–7 = Lock/bytes Jedec-plane physical low address			
		bits 8–15 = Lock/bytes Jedec-plane physical high address			
		bits 16–23 = "n" such that 2^n = factory pre-programmed bytes			
		bits 24–31 = "n" such that 2^n = user programmable bytes			
(P+13)h	10	Protection Field 2: Protection Description	11D:	--89	89h
(P+14)h		Bits 0–31 point to the Protection register physical Lock-word	11E:	--00	00h
(P+15)h		address in the Jedec-plane.	11F:	--00	00h
(P+16)h		Following bytes are factory or user-programmable.	120:	--00	00h
(P+17)h		bits 32–39 = "n" ∴ n = factory pgm'd groups (low byte)	121:	--00	0
(P+18)h		bits 40–47 = "n" ∴ n = factory pgm'd groups (high byte)	122:	--00	0
(P+19)h		bits 48–55 = "n" \ 2n = factory programmable bytes/group	123:	--00	0
(P+1A)h		bits 56–63 = "n" ∴ n = user pgm'd groups (low byte)	124:	--10	16
(P+1B)h		bits 64–71 = "n" ∴ n = user pgm'd groups (high byte)	125:	--00	0
(P+1C)h		bits 72–79 = "n" ∴ 2^n = user programmable bytes/group	126:	--04	16

Table 37: Burst Read Information

Offset[1] P = 10Ah	Length	Description (Optional flash features and commands)	Add.	Hex Code	Value
(P+1D)h	1	Page Mode Read capability	127:	--03	8 byte
		bits 0–7 = "n" such that 2^n HEX value represents the number of read-page bytes. See offset 28h for device word width to determine page-mode data output width. 00h indicates no read page buffer.			
(P+1E)h	1	Number of synchronous mode read configuration fields that follow. 00h indicates no burst capability.	128:	--04	4
(P+1F)h	1	Synchronous mode read capability configuration 1	129:	--01	4
		Bits 3–7 = Reserved			
		bits 0–2 "n" such that 2^{n+1} HEX value represents the maximum number of continuous synchronous reads when the device is configured for its maximum word width. A value of 07h indicates that the device is capable of continuous linear bursts that will output data until the internal burst counter reaches the end of the device's burstable address space. This field's 3-bit value can be written directly to the Read Configuration Register bits 0–2 if the device is configured for its maximum word width. See offset 28h for word width to determine the burst data output width.			
(P+20)h	1	Synchronous mode read capability configuration 2	12A:	--02	8
(P+21)h	1	Synchronous mode read capability configuration 3	12B:	--03	16
(P+22)h	1	Synchronous mode read capability configuration 4	12C:	--07	Cont

Downloaded from Arrow.com.

Table 38: Partition and Erase-block Region Information

Offset[1] P= 10Ah		Description	See table below		
				Address	
Bottom	Top	(Optional flash features and commands)	Len	Bot	Top
(P+23)h	(P+23)h	Number of device hardware-partition regions within the device. x = 0: a single hardware partition device (no fields follow). x specifies the number of device partition regions containing one or more contiguous erase block regions.	1	12D:	12D:

Downloaded from Arrow.com.

Table 39: Partition Region 1 Information

Offset[1] P = 10Ah Bottom	Offset[1] P = 10Ah Top	Description (Optional flash features and commands)	See table below Len	Address Bot	Address Top
(P+24)h (P+25)h	(P+24)h (P+25)h	Number of identical partitions within the partition region	2	12E: 12F:	12E: 12F:
(P+26)h	(P+26)h	Number of program or erase operations allowed in a partition bits 0–3 = number of simultaneous Program operations bits 4–7 = number of simultaneous Erase operations	1	130:	130:
(P+27)h	(P+27)h	Simultaneous program or erase operations allowed in other partitions while a partition in this region is in Program mode bits 0–3 = number of simultaneous Program operations bits 4–7 = number of simultaneous Erase operations	1	131:	131:
(P+28)h	(P+28)h	Simultaneous program or erase operations allowed in other partitions while a partition in this region is in Erase mode bits 0–3 = number of simultaneous Program operations bits 4–7 = number of simultaneous Erase operations	1	132:	132:
(P+29)h	(P+29)h	Types of erase block regions in this Partition Region. x = 0 = no erase blocking; the Partition Region erases in bulk x = number of erase block regions w/ contiguous same-size erase blocks. Symmetrically blocked partitions have one blocking region. Partition size = (Type 1 blocks)x(Type 1 block sizes) + (Type 2 blocks)x(Type 2 block sizes) +…+ (Type n blocks)x(Type n block sizes)	1	133:	133:
(P+2A)h (P+2B)h (P+2C)h (P+2D)h	(P+2A)h (P+2B)h (P+2C)h (P+2D)h	Partition Region 1 Erase Block Type 1 Information bits 0–15 = y, y+1 = number of identical-size erase blocks bits 16–31 = z, region erase block(s) size are z x 256 bytes	4	134: 135: 136: 137:	134: 135: 136: 137:
(P+2E)h (P+2F)h	(P+2E)h (P+2F)h	Partition 1 (Erase Block Type 1) Minimum block erase cycles x 1000	2	138: 139:	138: 139:
(P+30)h	(P+30)h	Partition 1 (erase block Type 1) bits per cell; internal ECC bits 0–3 = bits per cell in erase region bit 4 = reserved for “internal ECC used” (1=yes, 0=no) bits 5–7 = reserve for future use	1	13A:	13A:
(P+31)h	(P+31)h	Partition 1 (erase block Type 1) page mode and synchronous mode capabilities defined in Table 10. bit 0 = page-mode host reads permitted (1=yes, 0=no) bit 1 = synchronous host reads permitted (1=yes, 0=no) bit 2 = synchronous host writes permitted (1=yes, 0=no) bits 3–7 = reserved for future use	1	13B:	13B:
(P+32)h (P+33)h (P+34)h (P+35)h		Partition Region 1 Erase Block Type 2 Information bits 0–15 = y, y+1 = number of identical-size erase blocks bits 16–31 = z, region erase block(s) size are z x 256 bytes (bottom parameter device only)	4	13C: 13D: 13E: 13F:	
(P+36)h (P+37)h		Partition 1 (Erase block Type 2) Minimum block erase cycles x 1000	2	140: 141:	
(P+38)h		Partition 1 (Erase block Type 2) bits per cell bits 0–3 = bits per cell in erase region bit 4 = reserved for “internal ECC used” (1=yes, 0=no) bits 5–7 = reserve for future use	1	142:	
(P+39)h		Partition 1 (Erase block Type 2) pagemode and synchronous mode capabilities defined in Table 10 bit 0 = page-mode host reads permitted (1=yes, 0=no) bit 1 = synchronous host reads permitted (1=yes, 0=no) bit 2 = synchronous host writes permitted (1=yes, 0=no) bits 3–7 = reserved for future use	1	143:	

Downloaded from Arrow.com.

Table 40: Partition Region 2 Information

Offset[1] P = 10Ah Bottom	Offset[1] P = 10Ah Top	Description (Optional flash features and commands)	See table below Len	Address Bot	Address Top
(P+3A)h (P+3B)h	(P+32)h (P+33)h	Number of identical partitions within the partition region	2	144: 145:	13C: 13D:
(P+3C)h	(P+34)h	Number of program or erase operations allowed in a partition bits 0–3 = number of simultaneous Program operations bits 4–7 = number of simultaneous Erase operations	1	146:	13E:
(P+3D)h	(P+35)h	Simultaneous program or erase operations allowed in other partitions while a partition in this region is in Program mode bits 0–3 = number of simultaneous Program operations bits 4–7 = number of simultaneous Erase operations	1	147:	13F:
(P+3E)h	(P+36)h	Simultaneous program or erase operations allowed in other partitions while a partition in this region is in Erase mode bits 0–3 = number of simultaneous Program operations bits 4–7 = number of simultaneous Erase operations	1	148:	140:
(P+3F)h	(P+37)h	Types of erase block regions in this Partition Region. x = 0 = no erase blocking; the Partition Region erases in bulk x = number of erase block regions w/ contiguous same-size erase blocks. Symmetrically blocked partitions have one blocking region. Partition size = (Type 1 blocks)x(Type 1 block sizes) + (Type 2 blocks)x(Type 2 block sizes) +…+ (Type n blocks)x(Type n block sizes)	1	149:	141:
(P+40)h (P+41)h (P+42)h (P+43)h	(P+38)h (P+39)h (P+3A)h (P+3B)h	Partition Region 2 Erase Block Type 1 Information bits 0–15 = y, y+1 = number of identical-size erase blocks bits 16–31 = z, region erase block(s) size are z x 256 bytes	4	14A: 14B: 14C: 14D:	142: 143: 144: 145:
(P+44)h (P+45)h	(P+3C)h (P+3D)h	Partition 2 (Erase block Type 1) Minimum block erase cycles x 1000	2	14E: 14F:	146: 147:
(P+46)h	(P+3E)h	Partition 2 (Erase block Type 1) bits per cell bits 0–3 = bits per cell in erase region bit 4 = reserved for “internal ECC used” (1=yes, 0=no) bits 5–7 = reserve for future use	1	150:	148:
(P+47)h	(P+3F)h	Partition 2 (erase block Type 1) pagemode and synchronous mode capabilities as defined in Table 10. bit 0 = page-mode host reads permitted (1=yes, 0=no) bit 1 = synchronous host reads permitted (1=yes, 0=no) bit 2 = synchronous host writes permitted (1=yes, 0=no) bits 3–7 = reserved for future use	1	151:	149:
	(P+40)h (P+41)h (P+42)h (P+43)h	Partition Region 2 Erase Block Type 2 Information bits 0–15 = y, y+1 = number of identical-size erase blocks bits 16–31 = z, region erase block(s) size are z x 256 bytes	4		14A: 14B: 14C: 14D:
	(P+44)h (P+45)h	Partition 2 (Erase block Type 2) Minimum block erase cycles x 1000	2		14E: 14F:
	(P+46)h	Partition 2 (Erase block Type 2) bits per cell bits 0–3 = bits per cell in erase region bit 4 = reserved for “internal ECC used” (1=yes, 0=no) bits 5–7 = reserve for future use	1		150:
	(P+47)h	Partition 2 (erase block Type 2) pagemode and synchronous mode capabilities as defined in Table 10. bit 0 = page-mode host reads permitted (1=yes, 0=no) bit 1 = synchronous host reads permitted (1=yes, 0=no) bit 2 = synchronous host writes permitted (1=yes, 0=no) bits 3–7 = reserved for future use	1		151:

Downloaded from Arrow.com.

Table 41: Partition and Erase Block Region Information

Address	64 Mbit		128 Mbit		256 Mbit	
	–B	–T	–B	–T	–B	–T
12D:	--02	--02	--02	--02	--02	--02
12E:	--01	--07	--01	--0F	--01	--0F
12F:	--00	--00	--00	--00	--00	--00
130:	--11	--11	--11	--11	--11	--11
131:	--00	--00	--00	--00	--00	--00
132:	--00	--00	--00	--00	--00	--00
133:	--02	--01	--02	--01	--02	--01
134:	--03	--07	--03	--07	--03	--0F
135:	--00	--00	--00	--00	--00	--00
136:	--80	--00	--80	--00	--80	--00
137:	--00	--02	--00	--02	--00	--02
138:	--64	--64	--64	--64	--64	--64
139:	--00	--00	--00	--00	--00	--00
13A:	--02	--02	--02	--02	--02	--02
13B:	--03	--03	--03	--03	--03	--03
13C:	--06	--01	--06	--01	--0E	--01
13D:	--00	--00	--00	--00	--00	--00
13E:	--00	--11	--00	--11	--00	--11
13F:	--02	--00	--02	--00	--02	--00
140:	--64	--00	--64	--00	--64	--00
141:	--00	--02	--00	--02	--00	--02
142:	--02	--06	--02	--06	--02	--0E
143:	--03	--00	--03	--00	--03	--00
144:	--07	--00	--0F	--00	--0F	--00
145:	--00	--02	--00	--02	--00	--02
146:	--11	--64	--11	--64	--11	--64
147:	--00	--00	--00	--00	--00	--00
148:	--00	--02	--00	--02	--00	--02
149:	--01	--03	--01	--03	--01	--03
14A:	--07	--03	--07	--03	--0F	--03
14B:	--00	--00	--00	--00	--00	--00
14C:	--00	--80	--00	--80	--00	--80
14D:	--02	--00	--02	--00	--02	--00
14E:	--64	--64	--64	--64	--64	--64
14F:	--00	--00	--00	--00	--00	--00
150:	--02	--02	--02	--02	--02	--02
151:	--03	--03	--03	--03	--03	--03

Downloaded from Arrow.com.

Appendix D Additional Information

Order/Document Number	Document/Tool
251902	Numonyx™ StrataFlash® Wireless Memory (L18) Datasheet
290701	Numonyx™ Wireless Flash Memory (W18) Datasheet
290702	Numonyx™ Wireless Flash Memory (W30) Datasheet
290737	Numonyx StrataFlash® Synchronous Memory (K3/K18) Datasheet
251908	Migration Guide for 1.8 Volt Numonyx™ Wireless Flash Memory (W18/W30) to 1.8 Volt Numonyx™ StrataFlash® Wireless Memory (L18/L30), Application Note 753
251909	Migration Guide for 3 Volt Synchronous Numonyx™ StrataFlash® Memory (K3/K18) to 1.8 Volt Numonyx StrataFlash® Wireless Memory (L18/L30), Application Note 754
298161	Numonyx™ Flash Memory Chip Scale Package User's Guide
297833	Numonyx™ Flash Data Integrator (FDI) User's Guide
298136	Numonyx™ Persistent Storage Manager User Guide

Note: Contact your local Numonyx or distribution sales office or visit the Numonyx World Wide Web home page at http://www.Numonyx.com for technical documentation, tools, and the most current information on Numonyx StrataFlash® memory.

Downloaded from Arrow.com.

Appendix E Ordering Information

E.1 Ordering Information

To order samples, obtain datasheets or inquire about any stack combination, please contact your local Numonyx representative.

Table 42: 38F Type Stacked Components

PF	38F	5070	M0	Y	0	B	0
Package Designator	Product Line Designator	Product Die/ Density Configuration	NOR Flash Product Family	Voltage/NOR Flash CE# Configuration	Parameter / Mux Configuration	Ballout Identifier	Device Details
PF = SCSP, RoHS RD = SCSP, Leaded	Stacked NOR Flash + RAM	Char 1 = Flash die #1 Char 2 = Flash die #2 Char 3 = RAM die #1 Char 4 = RAM die #2 (See Table 44, "38F / 48F Density Decoder" on page 100 for details)	First character applies to Flash die #1 Second character applies to Flash die #2 (See Table 45, "NOR Flash Family Decoder" on page 101 for details)	V = 1.8 V Core and I/O; Separate Chip Enable per die (See Table 46, "Voltage / NOR Flash CE# Configuration Decoder" on page 101 for details)	0 = No parameter blocks; Non-Mux I/O interface (See Table 47, "Parameter / Mux Configuration Decoder" on page 101 for details)	B = x16D Ballout (See Table 48 "Ballout Decoder" on page 102 for details)	0 = Original released version of this product

Downloaded from Arrow.com.

Table 43: 48F Type Stacked Components

PC	48F	4400	P0	V	B	0	0
Package Designator	Product Line Designator	Product Die/ Density Configuration	NOR Flash Product Family	Voltage/NOR Flash CE# Configuration	Parameter / Mux Configuration	Ballout Identifier	Device Details
PC = Easy BGA, RoHS RC = Easy BGA, Leaded JS = TSOP, RoHS TE = TSOP, Leaded PF = SCSP, RoHS RD = SCSP, Leaded	Stacked NOR Flash only	Char 1 = Flash die #1 Char 2 = Flash die #2 Char 3 = Flash die #3 Char 4 = Flash die #4 (See Table 44, "38F / 48F Density Decoder" on page 100 for details)	First character applies to Flash dies #1 and #2 Second character applies to Flash dies #3 and #4 (See Table 45, "NOR Flash Family Decoder" on page 101 for details)	V = 1.8 V Core and 3 V I/O; Virtual Chip Enable (See Table 46, "Voltage / NOR Flash CE# Configuration Decoder" on page 101 for details)	B = Bottom parameter; Non-Mux I/O interface (See Table 47, "Parameter / Mux Configuration Decoder" on page 101 for details)	0 = Discrete Ballout (See Table 48 "Ballout Decoder" on page 102 for details)	0 = Original released version of this product

Table 44: 38F / 48F Density Decoder

Code	Flash Density	RAM Density
0	No Die	No Die
1	32-Mbit	4-Mbit
2	64-Mbit	8-Mbit
3	128-Mbit	16-Mbit
4	256-Mbit	32-Mbit
5	512-Mbit	64-Mbit
6	1-Gbit	128-Mbit
7	2-Gbit	256-Mbit
8	4-Gbit	512-Mbit
9	8-Gbit	1-Gbit
A	16-Gbit	2-Gbit
B	32-Gbit	4-Gbit
C	64-Gbit	8-Gbit
D	128-Gbit	16-Gbit
E	256-Gbit	32-Gbit
F	512-Gbit	64-Gbit

Downloaded from Arrow.com.

Table 45: NOR Flash Family Decoder

Code	Family	Marketing Name
C	C3	Numonyx Advanced+ Boot Block Flash Memory
J	J3v.D	Numonyx Embedded Flash Memory
L	L18 / L30	Numonyx™ StrataFlash® Wireless Memory
M	M18	Numonyx™ StrataFlash® Cellular Memory
P	P30 / P33	Numonyx™ StrataFalsh® Embedded Memory
W	W18 / W30	Numonyx Wireless Flash Memory
0(zero)	-	No Die

Table 46: Voltage / NOR Flash CE# Configuration Decoder

Code	I/O Voltage (Volt)	Core Voltage (Volt)	CE# Configuration
Z	3.0	1.8	Seperate Chip Enable per die
Y	1.8	1.8	Seperate Chip Enable per die
X	3.0	3.0	Seperate Chip Enable per die
V	3.0	1.8	Virtual Chip Enable
U	1.8	1.8	Virtual Chip Enable
T	3.0	3.0	Virtual Chip Enable
R	3.0	1.8	Virtual Address
Q	1.8	1.8	Virtual Address
P	3.0	3.0	Virtual Address

Table 47: Parameter / Mux Configuration Decoder (Sheet 1 of 2)

Code, Mux Identification	Number of Flash Die	Bus Width	Flash Die 1	Flash Die 2	Flash Die 3	Flash Die 4
0 = Non Mux 1 = AD Mux[a] 2= AAD Mux 3 =Full" AD Mux[b]	Any	NA	Notation used for stacks that contain no parameter blocks			
B = Non Mux C = AD Mux F = "Full" Ad Mux	1	X16	Bottom	-	-	-
	2		Bottom	Top	-	-
	3		Bottom	Bottom	Top	-
	4		Bottom	Top	Bottom	Top
	2	X32	Bottom	Bottom	-	-
	4		Bottom	Bottom	Top	Top

Downloaded from Arrow.com.

Table 47: Parameter / Mux Configuration Decoder (Sheet 2 of 2)

Code, Mux Identification	Number of Flash Die	Bus Width	Flash Die 1	Flash Die 2	Flash Die 3	Flash Die 4
T = Non Mux U = AD Mux W = "Full" Ad Mux	1	X16	Top	-	-	-
	2		Top	Bottom	-	-
	3		Top	Top	Bottom	-
	4		Top	Bottom	Top	Bottom
	2	X32	Top	Top	-	-
	4		Top	Top	Bottom	Bottom

a. Only Flash is Muxed and RAM is non-Muxed
b. Both Flash and RAM are AD-Muxed

Table 48: Ballout Decoder

Code	Ballout Definition
0 (Zero)	SDiscrete ballout (Easay BGA and TSOP)
B	x16D ballout, 105 ball (x16 NOR + NAND + DRAM Share Bus)
C	x16C ballout, 107 ball (x16 NOR + NAND + PSRAM Share Bus)
Q	QUAD/+ ballout, 88 ball (x16 NOR + PSRAM Share Bus)
U	x32SH ballout, 106 ball (x32 NOR only Share Bus)
V	x16SB ballout, 165 ball (x16 NOR / NAND + x16 DRAM Split Bus
W	x48D ballout, 165 ball (x16/x32 NOR + NAND + DRAM Split Bus

Downloaded from Arrow.com.