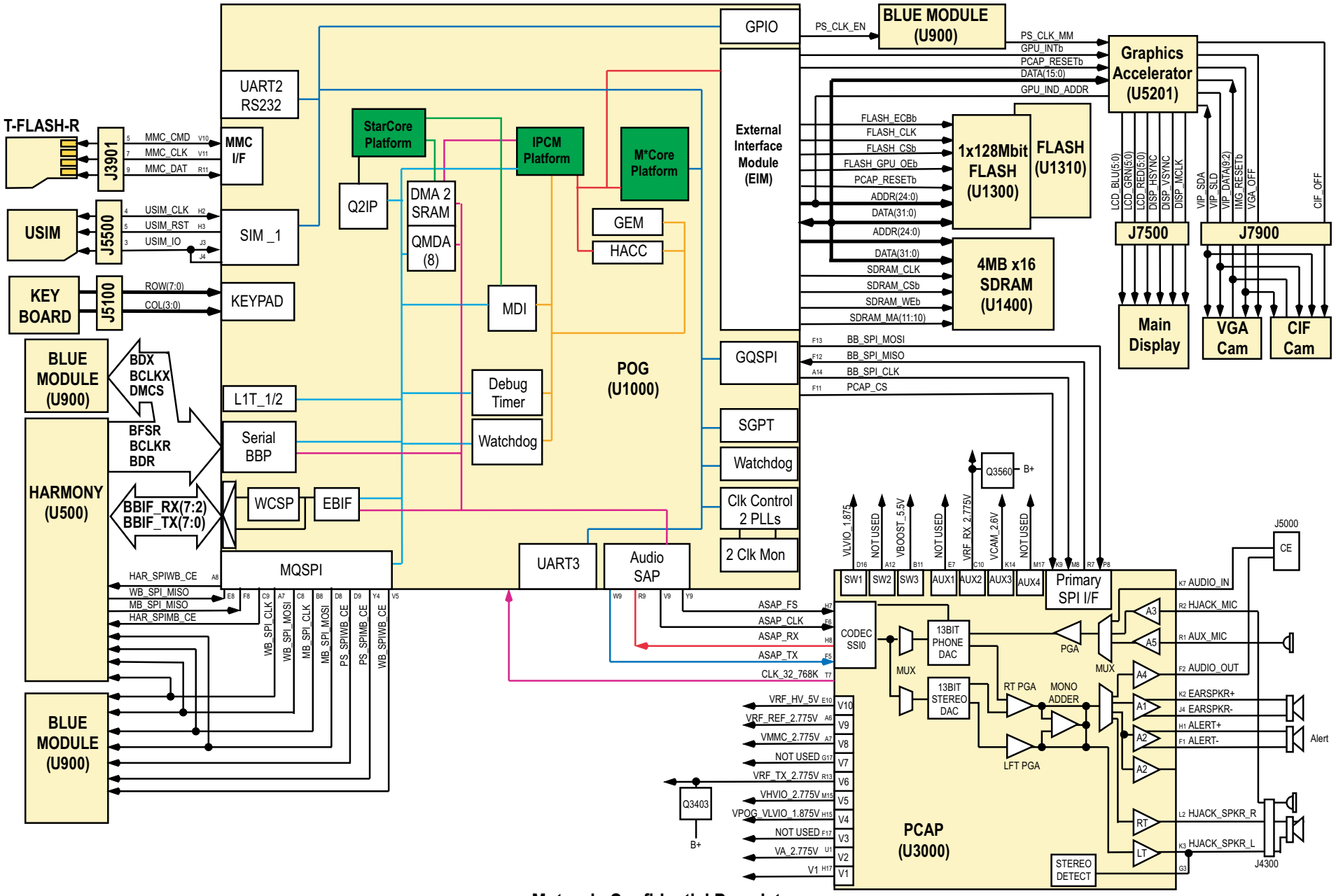C975/C980: POG I/F Block Diagram (v1.1) PCB: 8403671B10 Iss A