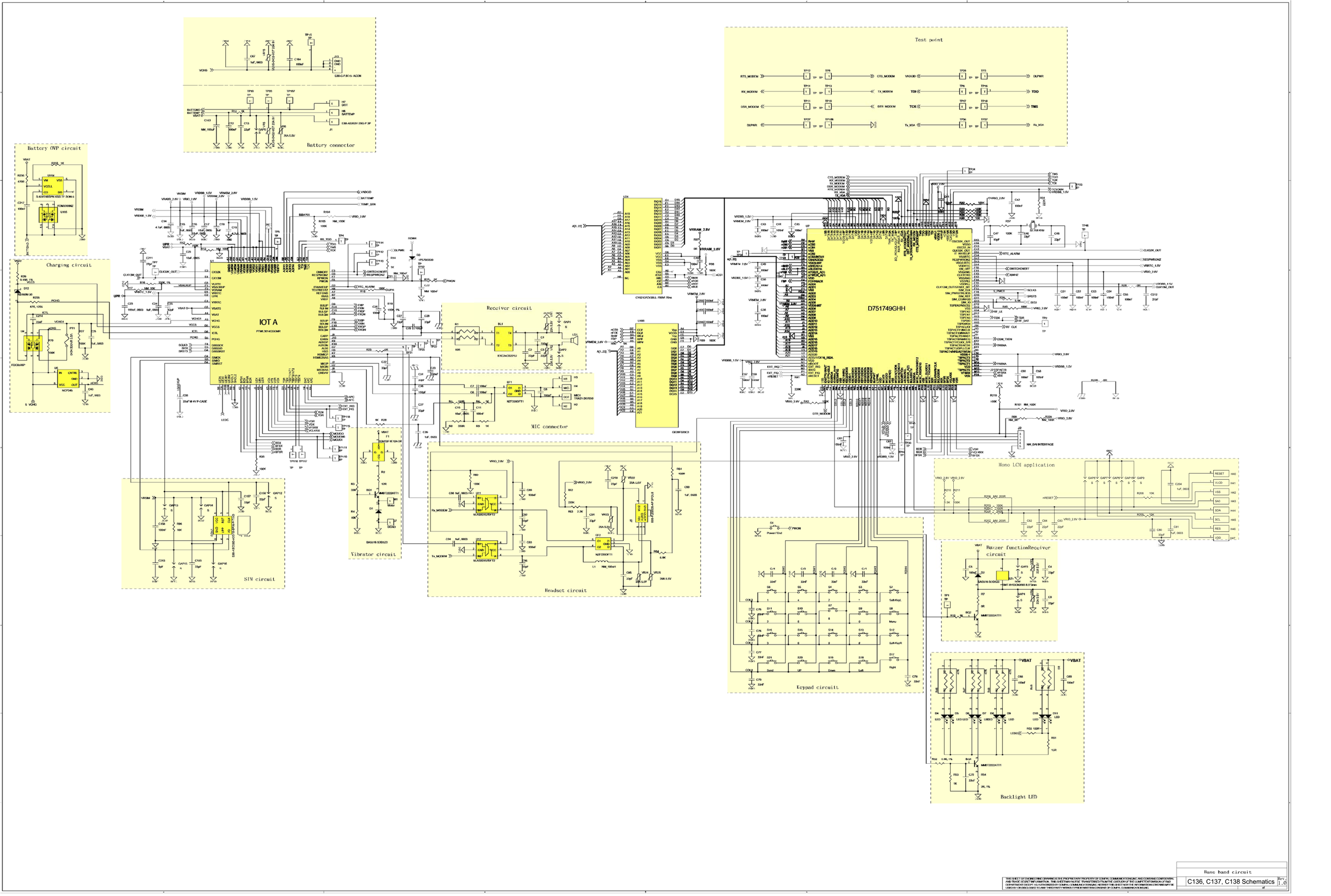
Battery connector
Test point
Battery OVP circuit
Charging circuit
IOT A
D751749GHH
Receiver circuit
MIC connector
Vibrator circuit
Headset circuit
SIM circuit
Keypad circuit
Mono LCN application
Buzzer functionReceiver circuit
Backlight LED
Basic band circuit
C136, C137, C138 Schematics
Rev. 1.0

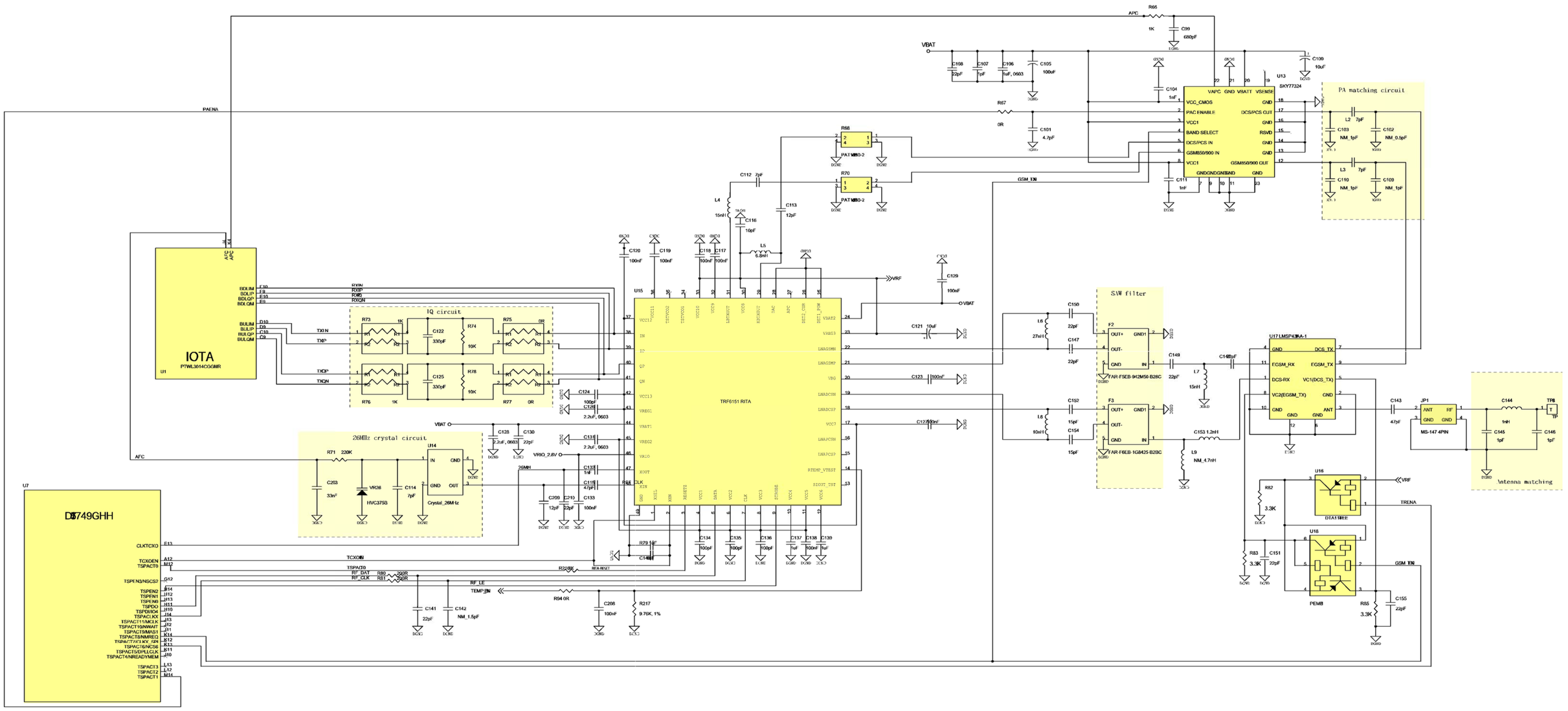

THIS SHEET OF ENGINEERING DRAWING IS THE PROPRIETARY PROPERTY OF COMPAL COMMUNICATIONS INC. AND CONTAINS CONFIDENTIAL AND TRADE SECRET INFORMATION. THIS SHEET MAY NOT BE TRANSFERRED FROM THE CUSTODY OF THE COMPETENT DIVISION OF R&D DEPARTMENT EXCEPT AS AUTHORIZED BY COMPAL COMMUNICATIONS INC. NEITHER THIS SHEET NOR THE INFORMATION CONTAINED IS USED BY OR DISCLOSED TO ANY THIRD PARTY WITHOUT PRIOR WRITTEN CONSENT OF COMPAL COMMUNICATIONS INC.

RF band circuit

C136, C137, C138 Schematics

Rev. 1.0

of