A920: Layout Side 1(P10C Build)

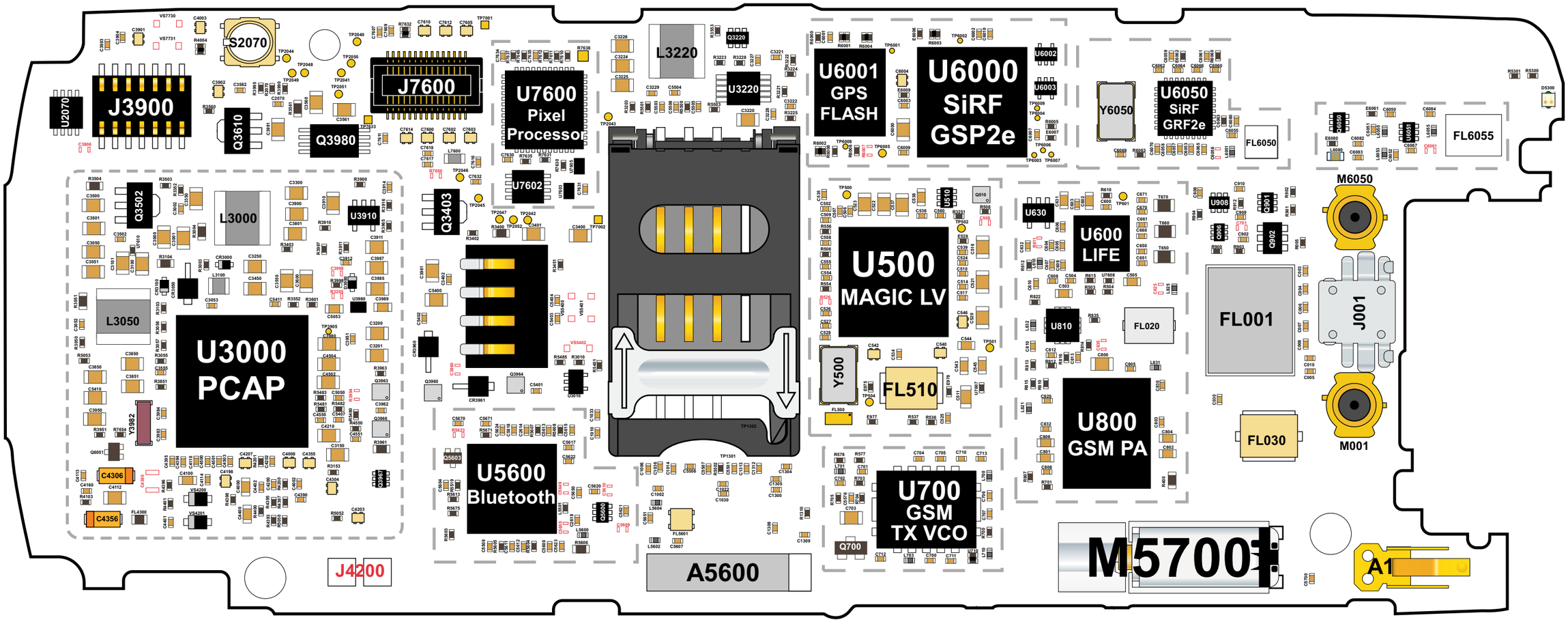

Board: 8487342M01

A920: Layout Side 2(P10C Build)

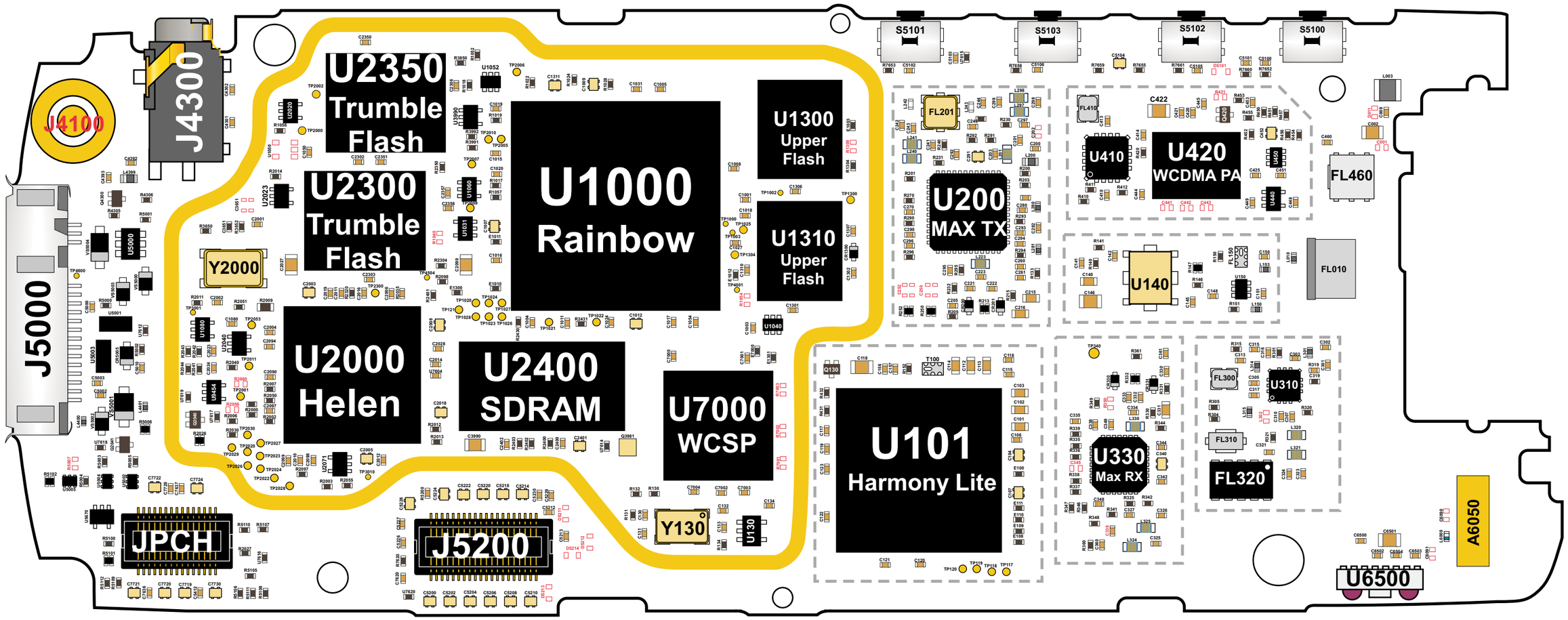

Board: 8487342M01