Service Engineering & Optimization

Level 3 Authorized

UMTS Band Version : 1, 2, 5 (LA, NA)

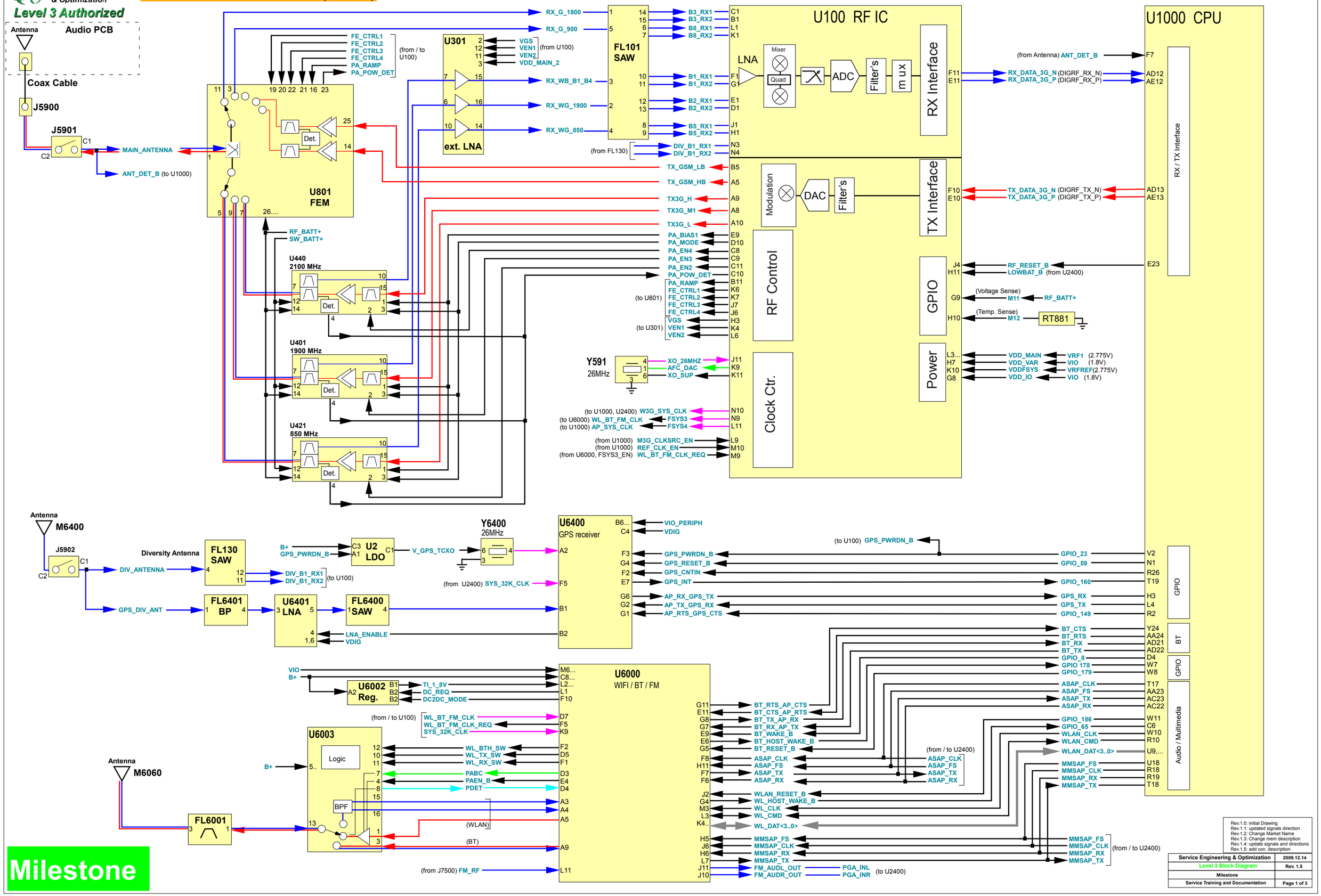

Milestone

Rev.1.0: initial Drawing
Rev.1.1: updated signals direction
Rev.1.2: Change Market Name
Rev.1.3: Change mem description
Rev.1.4: update signals and directions
Rev.1.5: add con. description

Service Engineering & Optimization	2009.12.14
Level 3 Block Diagram	Rev. 1.5
Milestone	
Service Training and Documentation	Page 1 of 3

Service Engineering & Optimization

Level 3 Authorized

UMTS Band Version : 1, 8 (EMEA, Asia)

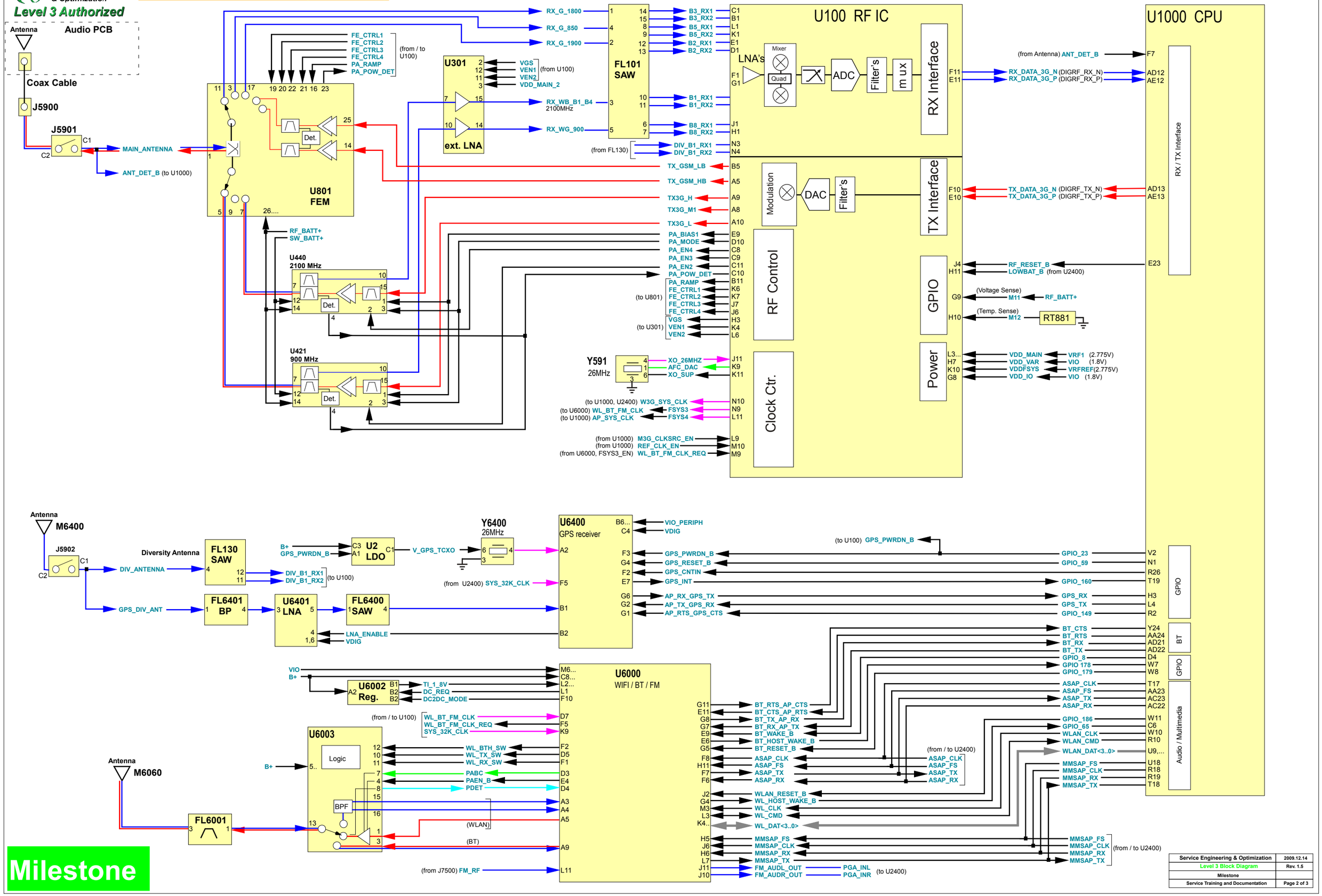

Milestone

Service Engineering & Optimization	2009.12.14
Level 3 Block Diagram	Rev. 1.5
Milestone	
Service Training and Documentation	Page 2 of 3

Service Engineering & Optimization
Level 3 Authorized

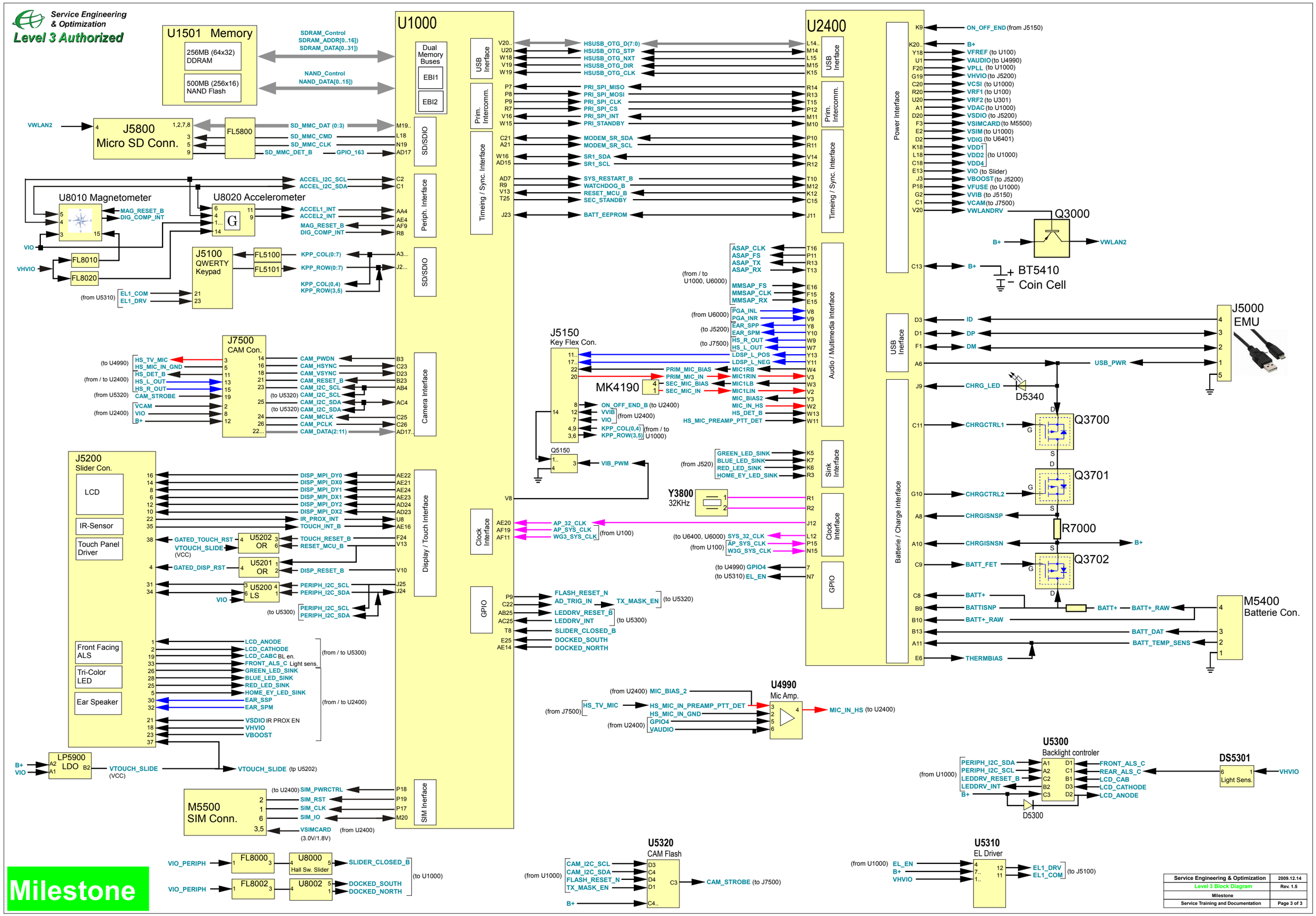

Service Engineering & Optimization	2009.12.14
Level 3 Block Diagram	Rev. 1.5
Milestone	
Service Training and Documentation	Page 3 of 3