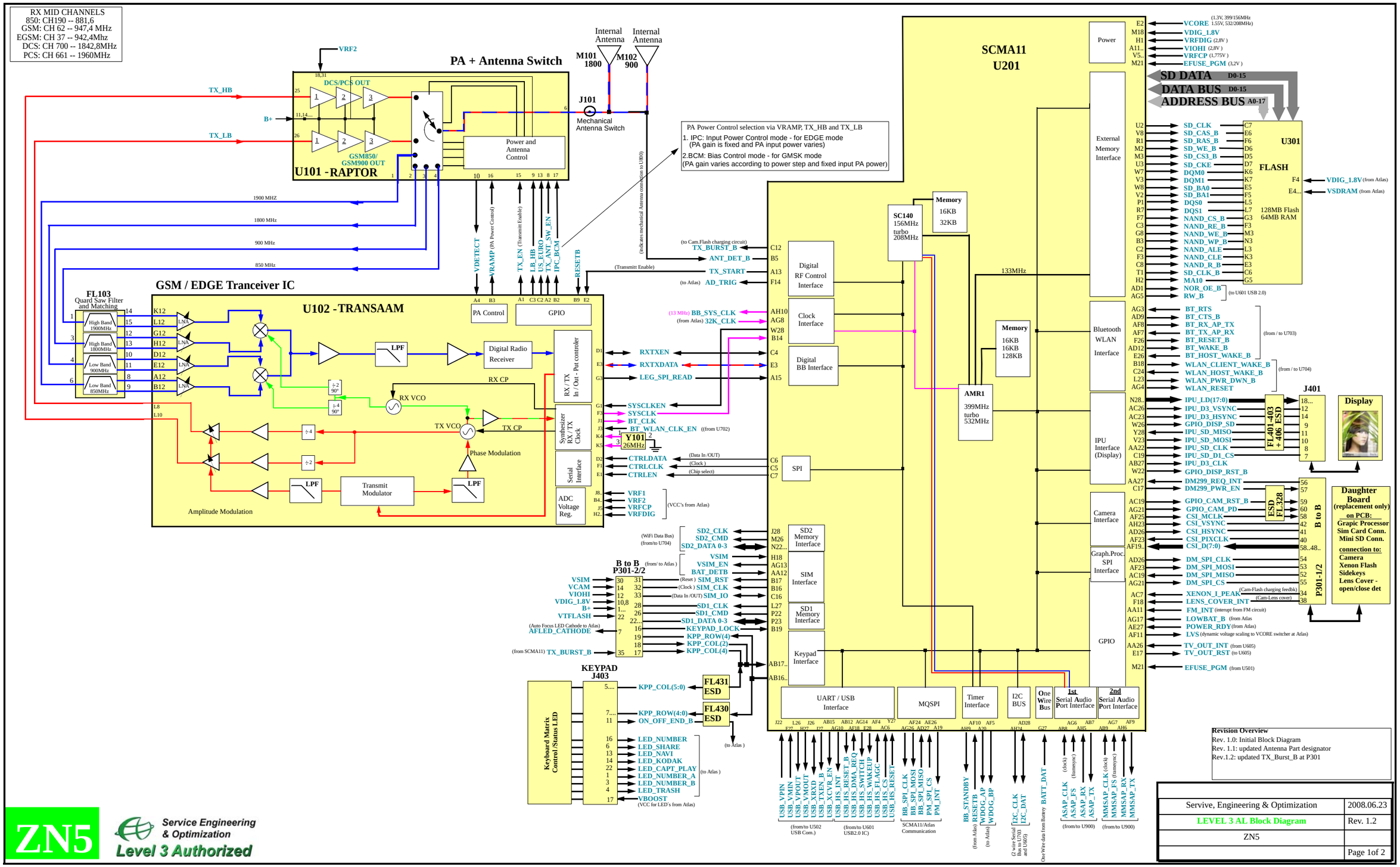
RX MID CHANNELS
850: CH190 -- 881,6
GSM: CH 62 -- 947,4 MHz
EGSM: CH 37 -- 942,4Mhz
DCS: CH 700 -- 1842,8MHz
PCS: CH 661 -- 1960MHz
PA + Antenna Switch
U101 -RAPTOR
DCS/PCS OUT
GSM850/ GSM900 OUT
Power and Antenna Control
Internal Antenna
M101 1800
M102 900
J101
Mechanical Antenna Switch
PA Power Control selection via VRAMP, TX_HB and TX_LB
1. IPC: Input Power Control mode - for EDGE mode (PA gain is fixed and PA input power varies)
2.BCM: Bias Control mode - for GMSK mode (PA gain varies according to power step and fixed input PA power)
GSM / EDGE Tranceiver IC
U102 -TRANSAAM
FL103 Quard Saw Filter and Matching
High Band 1900MHz
High Band 1800MHz
Low Band 900MHz
Low Band 850MHz
LNA
LPF
Digital Radio Receiver
RX / TX In / Out - Put controler
Synthesizer RX / TX Clock
Serial Interface
ADC Voltage Reg.
PA Control
GPIO
RX VCO
TX VCO
Phase Modulation
Transmit Modulator
Amplitude Modulation
Y101 26MHz
SCMA11 U201
Digital RF Control Interface
Clock Interface
Digital BB Interface
SPI
SD2 Memory Interface
SIM Interface
SD1 Memory Interface
Keypad Interface
UART / USB Interface
MQSPI
Timer Interface
I2C BUS
One Wire Bus
1st Serial Audio Port Interface
2nd Serial Audio Port Interface
SC140 156MHz turbo 208MHz
Memory 16KB 32KB
AMR1 399MHz turbo 532MHz
Memory 16KB 16KB 128KB
Power
External Memory Interface
Bluetooth WLAN Interface
IPU Interface (Display)
Camera Interface
Graph.Proc. SPI Interface
GPIO
SD DATA D0-15
DATA BUS D0-15
ADDRESS BUS A0-17
U301 FLASH
128MB Flash 64MB RAM
J401
FL401-403 + 406 ESD
Display
ESD FL.328
B to B P301-1/2
Daughter Board (replacement only)
on PCB:
Grapic Processor
Sim Card Conn.
Mini SD Conn.
connection to:
Camera
Xenon Flash
Sidekeys
Lens Cover - open/close det
B to B P301-2/2
KEYPAD J403
Keyboard Matrix Control /Status LED
FL431 ESD
FL430 ESD
Revision Overview
Rev. 1.0: Initial Block Diagram
Rev. 1.1: updated Antenna Part designator
Rev.1.2: updated TX_Burst_B at P301
ZN5
Service Engineering & Optimization
Level 3 Authorized
Servive, Engineering & Optimization
2008.06.23
LEVEL 3 AL Block Diagram
Rev. 1.2
ZN5
Page 1of 2

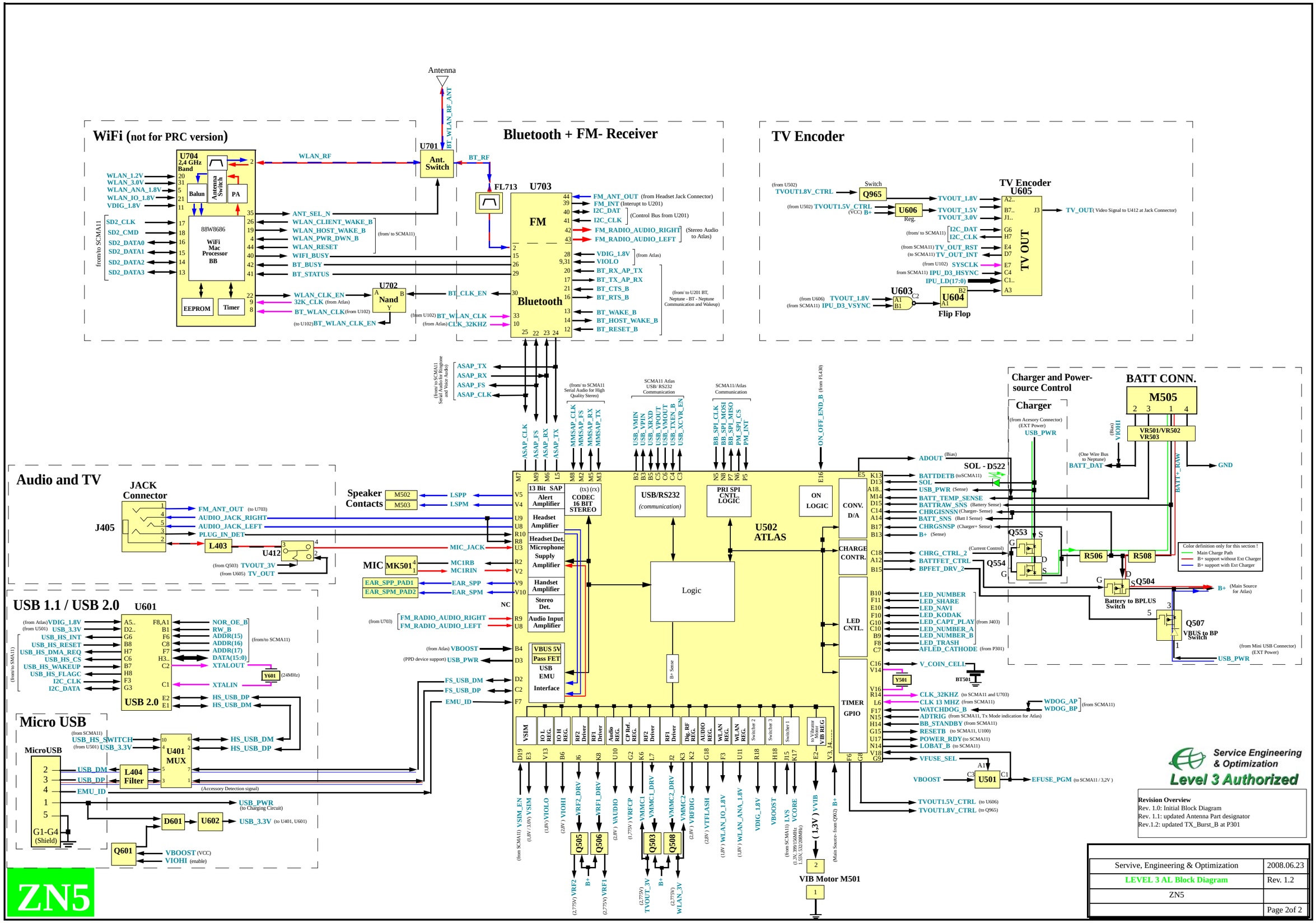
WiFi (not for PRC version)
U704
2,4 GHz Band
Balun
Antenna Switch
PA
88W8686
WiFi Mac Processor BB
EEPROM
Timer
WLAN_1.2V
WLAN_3.0V
WLAN_ANA_1.8V
WLAN_IO_1.8V
VDIG_1.8V
SD2_CLK
SD2_CMD
SD2_DATA0
SD2_DATA1
SD2_DATA2
SD2_DATA3
from/to SCMA11
WLAN_RF
ANT_SEL_N
WLAN_CLIENT_WAKE_B
WLAN_HOST_WAKE_B
WLAN_PWR_DWN_B
WLAN_RESET
WIFI_BUSY
BT_BUSY
BT_STATUS
WLAN_CLK_EN
32K_CLK (from Atlas)
BT_WLAN_CLK (from U102)
(to U102) BT_WLAN_CLK_EN
U702
Nand
BT_CLK_EN
(from U102) BT_WLAN_CLK
(from Atlas) CLK_32KHZ
Antenna
BT_WLAN_RF_ANT
U701
Ant. Switch
BT_RF
Bluetooth + FM- Receiver
FL713
U703
FM
Bluetooth
FM_ANT_OUT (from Headset Jack Connector)
FM_INT (Interupt to U201)
I2C_DAT
I2C_CLK
(Control Bus from U201)
FM_RADIO_AUDIO_RIGHT
FM_RADIO_AUDIO_LEFT
(Stereo Audio to Atlas)
VDIG_1.8V (from Atlas)
VIOLO
BT_RX_AP_TX
BT_TX_AP_RX
BT_CTS_B
BT_RTS_B
BT_WAKE_B
BT_HOST_WAKE_B
BT_RESET_B
(from/ to U201 BT, Neptune - BT - Neptune Communication and Wakeup)
TV Encoder
(from U502) TVOUT1.8V_CTRL
Switch
Q965
(from U502) TVOUT1.5V_CTRL
(VCC) B+
U606
Reg.
TVOUT_1.8V
TVOUT_1.5V
TVOUT_3.0V
TV Encoder
U605
TV OUT
TV_OUT(Video Signal to U412 at Jack Connector)
(from/ to SCMA11) I2C_DAT
I2C_CLK
(from SCMA11) TV_OUT_RST
(to SCMA11) TV_OUT_INT
(from U102) SYSCLK
from SCMA11) IPU_D3_HSYNC
IPU_LD(17:0)
U603
U604
Flip Flop
(from U606) TVOUT_1.8V
(from SCMA11) IPU_D3_VSYNC
(from/to SCMA11 Serial Audio for Ringtone and Voice Audio)
ASAP_TX
ASAP_RX
ASAP_FS
ASAP_CLK
(from/ to SCMA11 Serial Audio for High Quality Stereo)
MMSAP_CLK
MMSAP_FS
MMSAP_RX
MMSAP_TX
SCMA11 Atlas USB/ RS232 Communication
USB_VMIN
USB_VPIN
USB_XRXD
USB_VPOUT
USB_VMOUT
USB_TXEN_B
USB_XCVR_EN
SCMA11/Atlas Communication
BB_SPI_CLK
BB_SPI_MOSI
BB_SPI_MISO
PM_SPI_CS
PM_INT
ON_OFF_END_B (from FL430)
Charger and Power-source Control
Charger
(from Acesory Connector) (EXT Power)
USB_PWR
BATT CONN.
M505
VR501/VR502
VR503
(Bias) VIOHI
(One Wire Bus to Neptune)
BATT_DAT
GND
BATT+_RAW
ADOUT (Bias)
SOL - D522
BATTDETB (toSCMA11)
SOL
USB_PWR (Sense)
BATT_TEMP_SENSE
BATTRAW_SNS (Battery Sense)
CHRGISNSN (Charger- Sense)
BATT_SNS (Batt I Sense)
CHRGSNSP (Charger+ Sense)
B+ (Sense)
Q553
Q554
R506
R508
Q504
Battery to BPLUS Switch
Q507
VBUS to BP Switch
B+ (Main Source for Atlas)
(from Mini USB Connector) (EXT Power)
USB_PWR
Color definition only for this section !
Main Charge Path
B+ support without Ext Charger
B+ support with Ext Charger
(Current Control)
CHRG_CTRL_2
BATTFET_CTRL
BPFET_DRV_2
LED_NUMBER
LED_SHARE
LED_NAVI
LED_KODAK
LED_CAPT_PLAY (from J403)
LED_NUMBER_A
LED_NUMBER_B
LED_TRASH
AFLED_CATHODE (from P301)
V_COIN_CELL
Y501
BT501
CLK_32KHZ (to SCMA11 and U703)
CLK 13 MHZ (from SCMA11)
WATCHDOG_B
WDOG_AP
WDOG_BP (from SCMA11)
ADTRIG (from SCMA11, Tx Mode indication for Atlas)
BB_STANDBY (from SCMA11)
RESETB (to SCMA11, U100)
POWER_RDY (to SCMA11)
LOBAT_B (to SCMA11)
VFUSE_SEL
VBOOST
U501
EFUSE_PGM (to SCMA11 / 3.2V)
TVOUT1.5V_CTRL (to U606)
TVOUT1.8V_CTRL (to Q965)
Audio and TV
JACK Connector
J405
FM_ANT_OUT (to U703)
AUDIO_JACK_RIGHT
AUDIO_JACK_LEFT
PLUG_IN_DET
L403
U412
(from Q503) TVOUT_3V
(from U605) TV_OUT
Speaker Contacts
M502
M503
LSPP
LSPM
MIC_JACK
MIC
MK501
MC1RB
MC1RIN
EAR_SPP_PAD1
EAR_SPM_PAD2
EAR_SPP
EAR_SPM
NC
(from U703) FM_RADIO_AUDIO_RIGHT
FM_RADIO_AUDIO_LEFT
(from Atlas) VBOOST
(PPD device support) USB_PWR
FS_USB_DM
FS_USB_DP
EMU_ID
13 Bit SAP
Alert Amplifier
Headset Amplifier
Headset Det.
Microphone Supply Amplifier
Handset Amplifier
Stereo Det.
Audio Input Amplifier
VBUS 5V
Pass FET
USB EMU Interface
CODEC 16 BIT STEREO
USB/RS232 (communication)
PRI SPI CNTL. LOGIC
ON LOGIC
CONV. D/A
CHARGE CONTR.
LED CNTL.
TIMER GPIO
U502 ATLAS
Logic
B+ Sense
VSIM
IO L REG.
IO H REG.
RF2 Driver
RF1 Driver
Audio REG.
CP Ref. REG.
Dig. RF REG.
AUDIO REG.
WLAN REG.
Switcher 2
Switcher 3
Switcher 1
to Vibrator Motor VIB REG
VSIM_EN
VSIM
VIOLO
VIOHI
VRF2_DRV
VRF1_DRV
VAUDIO
VRFCP
VMMC1
VMMC1_DRV
VMMC2_DRV
VMMC2
VRFDIG
VTFLASH
WLAN_IO_1.8V
WLAN_ANA_1.8V
VDIG_1.8V
VBOOST
LVS
VCORE
(1.3V) VVIB
VIB Motor M501
Q505
Q506
Q503
Q508
VRF2
VRF1
TVOUT_3V
WLAN_3V
B+
USB 1.1 / USB 2.0
U601
USB 2.0
(from Atlas) VDIG_1.8V
(from U501) USB_3.3V
USB_HS_INT
USB_HS_RESET
USB_HS_DMA_REQ
USB_HS_CS
USB_HS_WAKEUP
USB_HS_FLAGC
I2C_CLK
I2C_DATA
(from/to SMA11)
NOR_OE_B
RW_B
ADDR(15)
ADDR(16)
ADDR(17)
DATA(15:0)
XTALOUT
XTALIN
Y601 (24MHz)
HS_USB_DP
HS_USB_DM
Micro USB
MicroUSB
(from SCMA11) USB_HS_SWITCH
(from U501) USB_3.3V
U401 MUX
L404 Filter
USB_DM
USB_DP
EMU_ID
(Accessory Detection signal)
USB_PWR (to Charging Circuit)
D601
U602
USB_3.3V (to U401, U601)
G1-G4 (Shield)
Q601
VBOOST (VCC)
VIOHI (enable)
ZN5
Service Engineering & Optimization
Level 3 Authorized
Revision Overview
Rev. 1.0: Initial Block Diagram
Rev. 1.1: updated Antenna Part designator
Rev.1.2: updated TX_Burst_B at P301
Servive, Engineering & Optimization
2008.06.23
LEVEL 3 AL Block Diagram
Rev. 1.2
ZN5
Page 2of 2