EAGLE

SYSTEM 2017

BASED ON 80-P2169-41 REV B

REVISIONS				
ZONE	LTR	DESCRIPTION	DATE	APPROVED

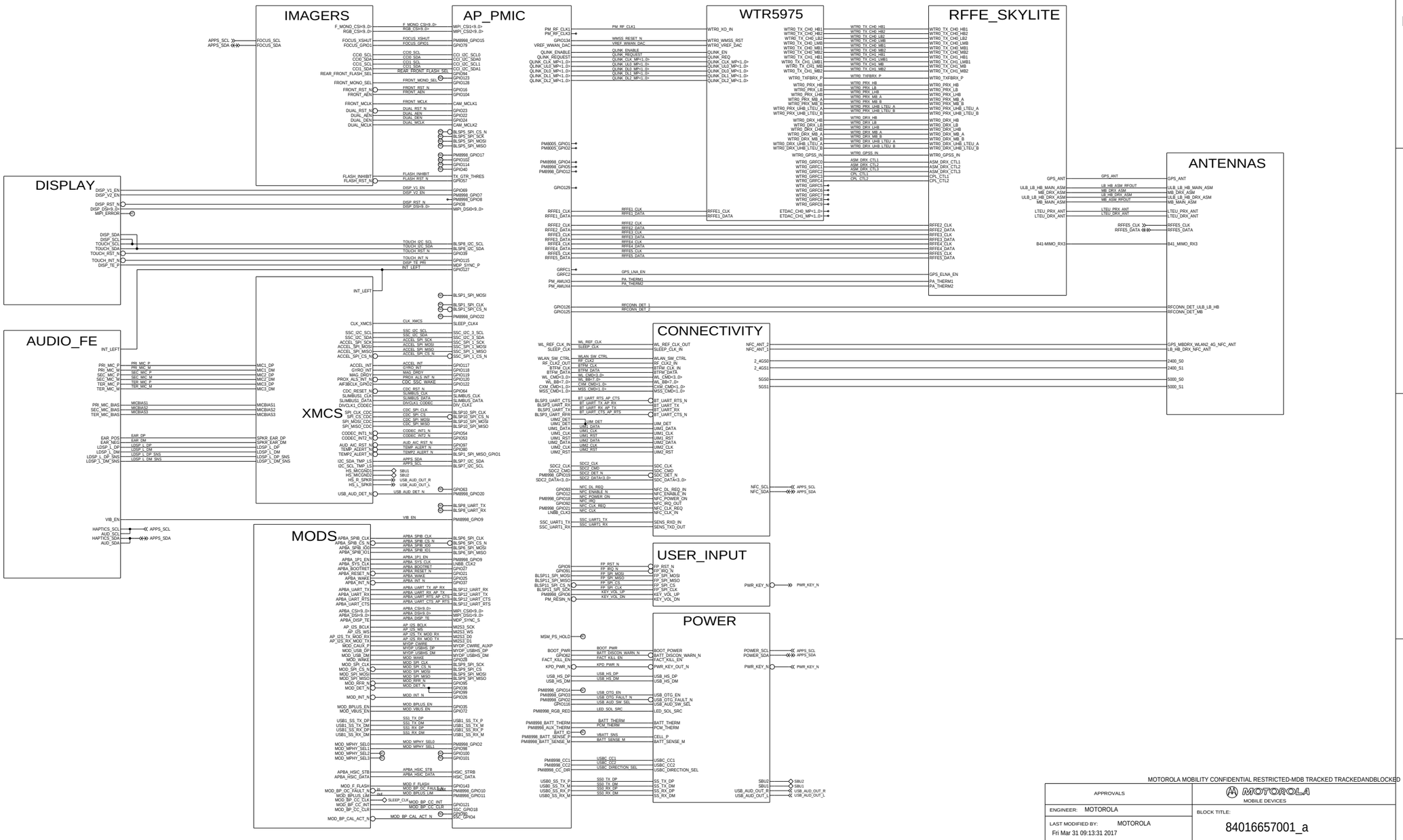

MOTOROLA MOBILITY CONFIDENTIAL RESTRICTED-MDB TRACKED TRACKEDANDBLOCKED

APPROVALS	MOTOROLA MOBILE DEVICES
ENGINEER: MOTOROLA	BLOCK TITLE: 84016657001_a
LAST MODIFIED BY: MOTOROLA Fri Mar 31 09:13:31 2017	
MOTOROLA CONFIDENTIAL RESTRICTED	PROJECT NAME: 84016657001_a.cpm; REV: D 03
THE DRAWING ON THIS PRINT AND INFORMATION THEREWITH ARE PROPRIETARY TO MOTOROLA AND SHALL NOT BE USED OR DISCLOSED IN WHOLE OR IN PART WITHOUT MOTOROLA'S CONSENT. © COPYRIGHT, MOTOROLA. THIS DOES NOT IMPLY PUBLICATION	CAD FILE NAME: PAGE 1 OF 91

EAGLE ME/SHIELDS

REFERENCE DESIGNATOR RANGES BY BLOCK

000 - 499: ANTENNA

500 - 699: POWER

700 - 799: AMPS

800 - 899: USER INPUT

1000-2999: MSM8998 + PM8998 + PMI8998 + PM8005

3000-3199: WTR5975

4000-4499: CONNECTIVITY

4500-4999: AUDIO FE

5000-5499: DISPLAY

5500-5999: IMAGERS

6000-6999: XMCS

7000-8999: RFFE

9000-9999: PRODUCT-SPECIFIC (FILTERING, 100PF CAPS)

REG GND CLIPS

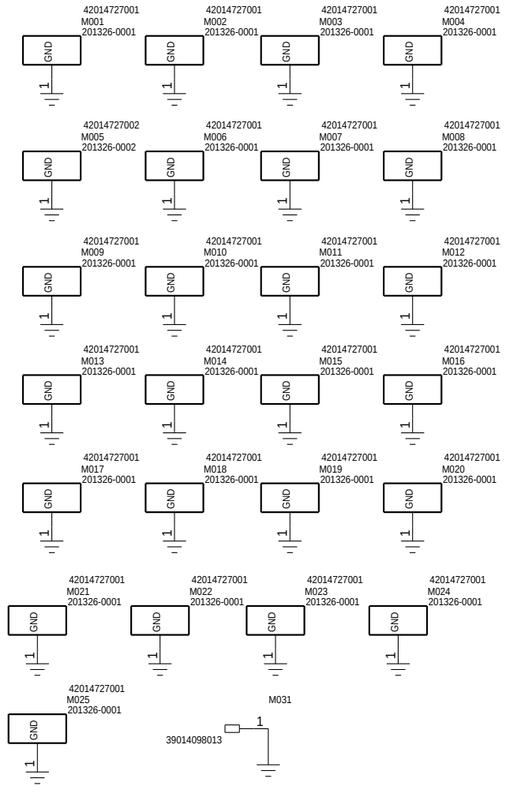

SHORT GND CLIPS

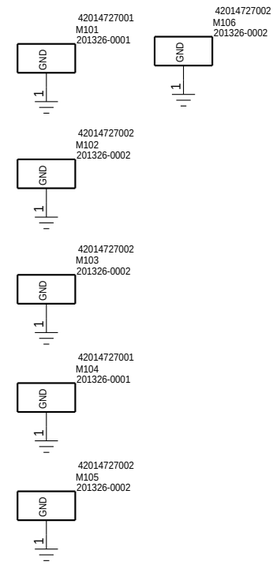

COAX GND CLIPS

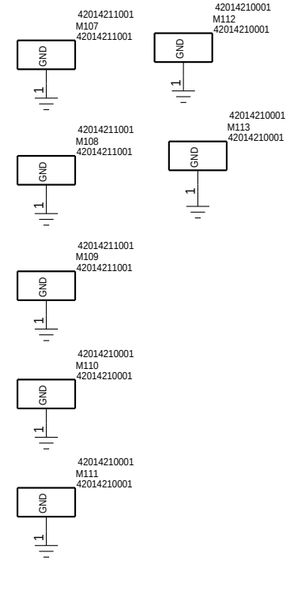

GROUND CONTACTS FROM PCB TO REAR

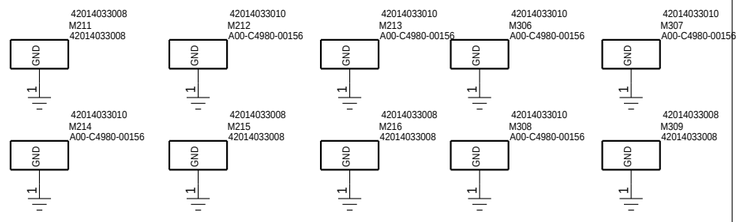

OTHER GND CLIPS

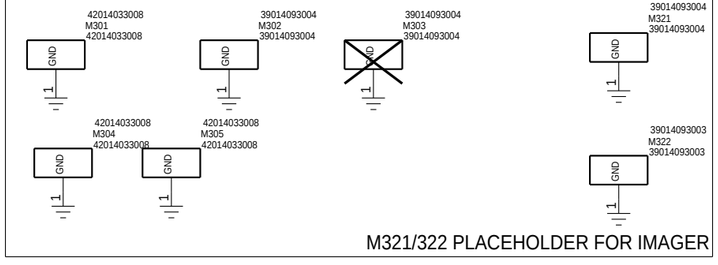

M321/322 PLACEHOLDER FOR IMAGER

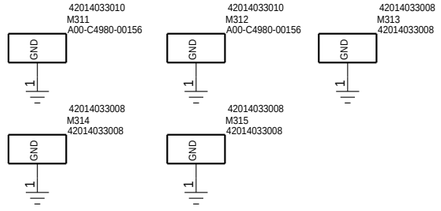

ANT GND CLIPS

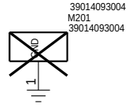

SHIELDS

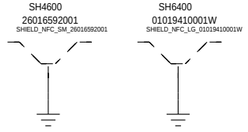

MOTOROLA MOBILITY CONFIDENTIAL RESTRICTED-MDB TRACKED TRACKEDANDBLOCKED

APPROVALS	MOTOROLA MOBILE DEVICES
ENGINEER: MOTOROLA	BLOCK TITLE: 84016657001_a
LAST MODIFIED BY: MOTOROLA Fri Mar 31 09:15:25 2017	
MOTOROLA CONFIDENTIAL RESTRICTED	B | PROJECT NAME 84016657001_a.cpm | REV 03
CAD FILE NAME:	PAGE 2 OF 91

THE DRAWING ON THIS PRINT AND INFORMATION THEREWITH ARE PROPRIETARY TO MOTOROLA AND SHALL NOT BE USED OR DISCUSSED IN WHOLE OR IN PART WITHOUT MOTOROLA'S CONSENT.
© COPYRIGHT, MOTOROLA. THIS DOES NOT IMPLY PUBLICATION

ANT: PORTS

REFDES: 000 - 499

SUPPLIES

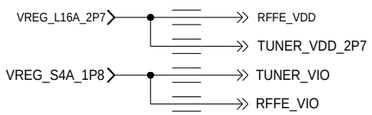

VERIFY POWER SUPPLIES TP PMIC

TUNER INTERFACE

ULTRA LOW + LOW + HIGH BAND ANTENNAS

MID BAND ANTENNAS

LTE-U ANTENNAS

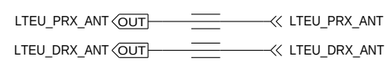

GPS ANTENNA

BT/WLAN ANTENNAS

NFC ANTENNA

INPUTS /OUTPUTS - RF_CON_DET

B41 HPUE + MIMO

APPROVALS	MOTOROLA MOBILE DEVICES
ENGINEER: MOTOROLA	BLOCK TITLE: antennas
LAST MODIFIED BY: MOTOROLA Fri Mar 31 09:13:25 2017	
MOTOROLA CONFIDENTIAL RESTRICTED	B | PROJECT NAME 84016657001_a.cpm | REV 03
CAD FILE NAME:	PAGE 3 OF 91

THE DRAWING ON THIS PRINT AND INFORMATION THEREWITH ARE PROPRIETARY TO MOTOROLA AND SHALL NOT BE USED OR DISCUSSED IN WHOLE OR IN PART WITHOUT MOTOROLA'S CONSENT.
© COPYRIGHT, MOTOROLA. THIS DOES NOT IMPLY PUBLICATION

ANT: ULB+LB+HB MAIN

REFDES: 200-299

ANTENNA 0 - COUPLED FED LOOP BOTTOM

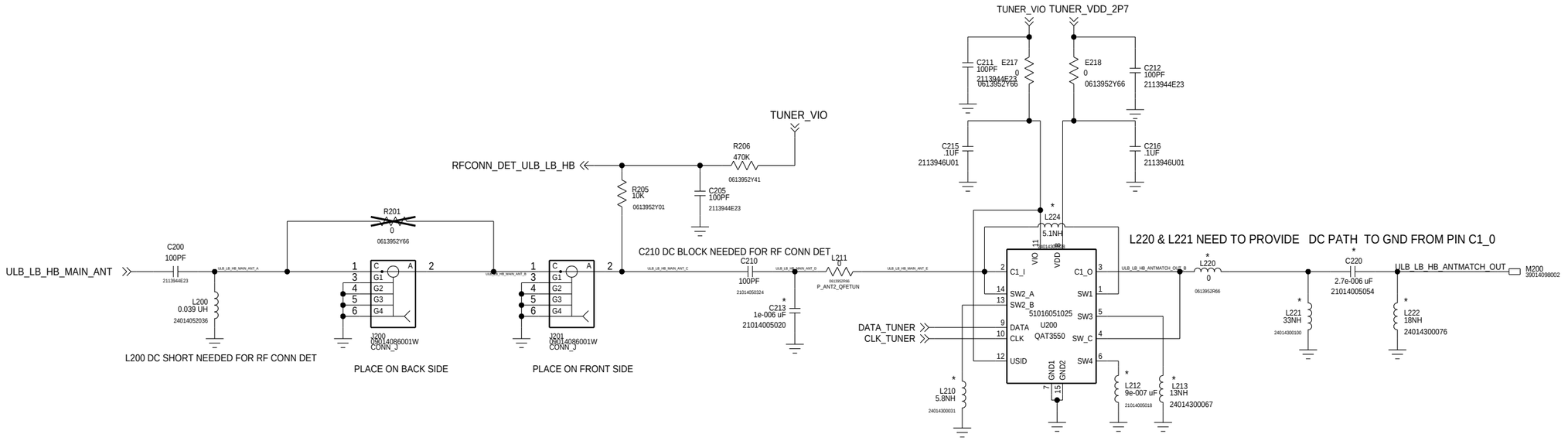

APPROVALS	MOTOROLA MOBILE DEVICES
ENGINEER: MOTOROLA	BLOCK TITLE: antennas
LAST MODIFIED BY: MOTOROLA Fri Mar 31 09:15:28 2017	
MOTOROLA CONFIDENTIAL RESTRICTED	B | PROJECT NAME 84016657001_a.cpm | REV 03
CAD FILE NAME:	PAGE 4 OF 91

THE DRAWING ON THIS PRINT AND INFORMATION THEREWITH ARE PROPRIETARY TO MOTOROLA AND SHALL NOT BE USED OR DISCUSSED IN WHOLE OR IN PART WITHOUT MOTOROLA'S CONSENT.
© COPYRIGHT, MOTOROLA. THIS DOES NOT IMPLY PUBLICATION

ANT: MB MAIN + WLAN_S1 + B41 MIMO RX3

REFDES: 100-199

ANTENNA 1 - DIRECT FED LOOP BOTTOM

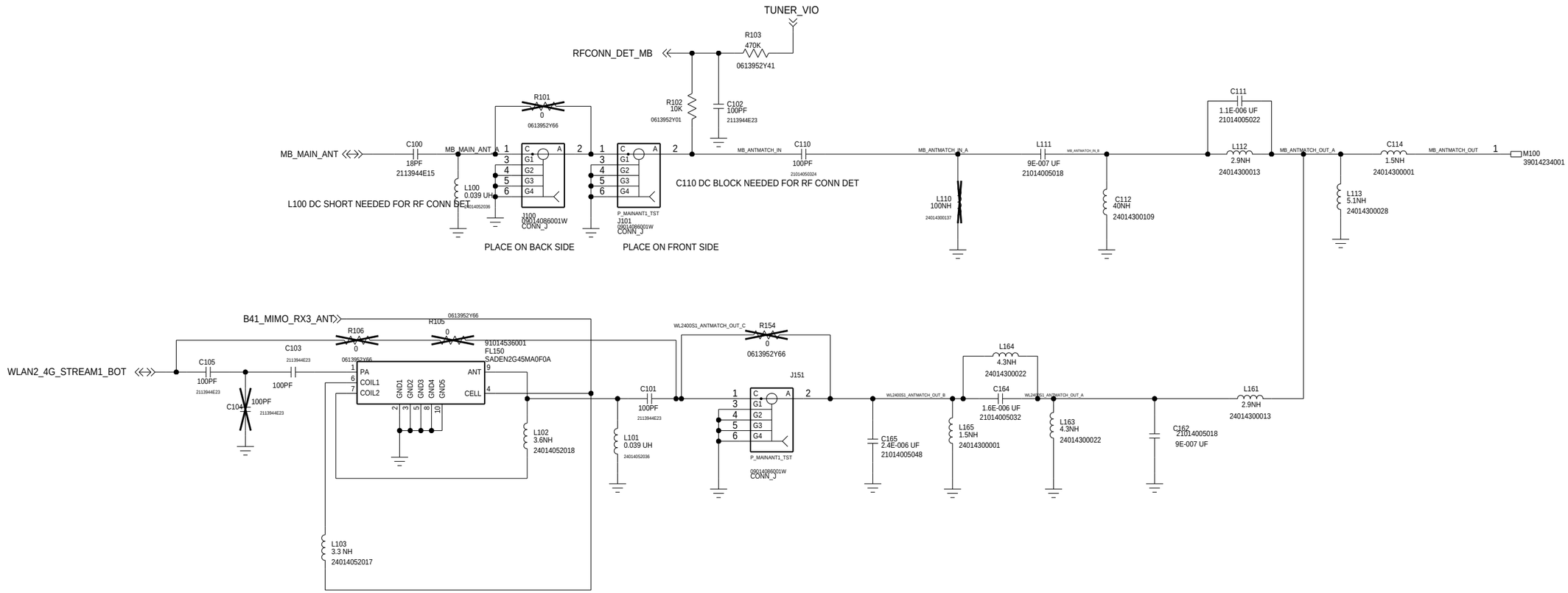

APPROVALS	MOTOROLA MOBILE DEVICES
ENGINEER: MOTOROLA	BLOCK TITLE: antennas
LAST MODIFIED BY: MOTOROLA Fri Mar 31 09:15:30 2017	
MOTOROLA CONFIDENTIAL RESTRICTED	B | PROJECT NAME 84016657001_a.cpm | REV 03
THE DRAWING ON THIS PRINT AND INFORMATION THEREWITH ARE PROPRIETARY TO MOTOROLA AND SHALL NOT BE USED OR DISCUSSED IN WHOLE OR IN PART WITHOUT MOTOROLA'S CONSENT. © COPYRIGHT, MOTOROLA. THIS DOES NOT IMPLY PUBLICATION	CAD FILE NAME: | PAGE 5 OF 91

ANT: ULB+LB+HB DIV

REFDES: 300-399

ANTENNA 2 - DIRECT FED LOOP TOP

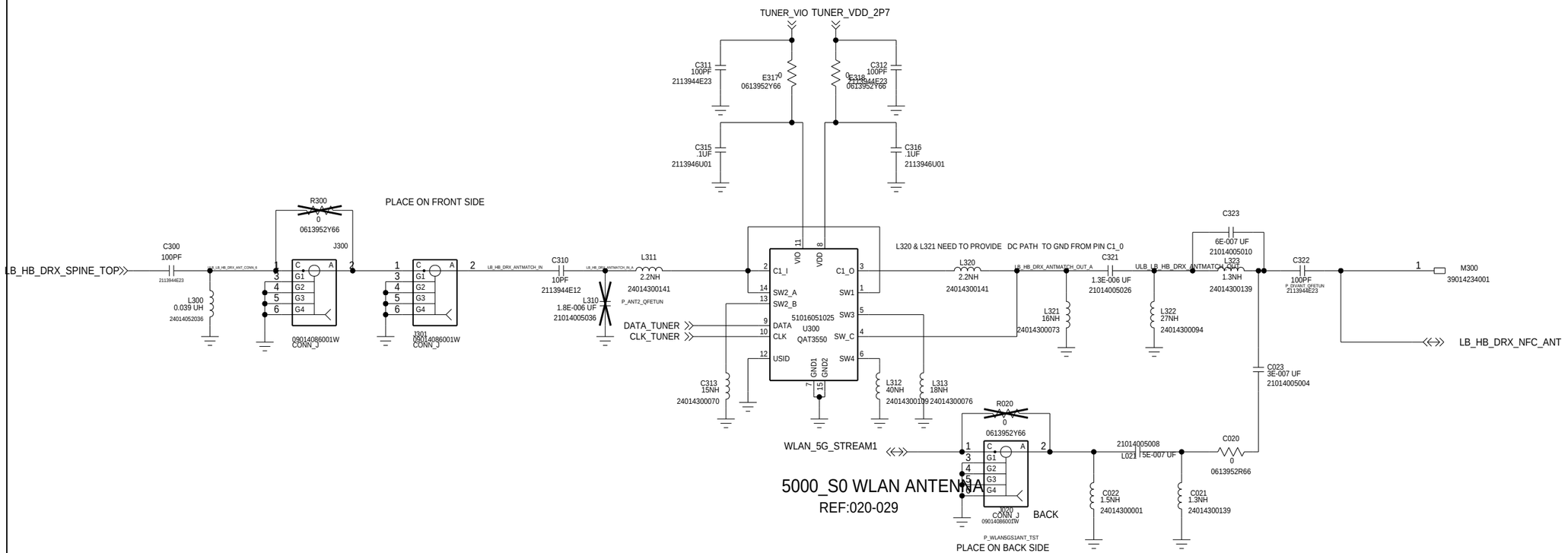

APPROVALS	MOTOROLA MOBILE DEVICES
ENGINEER: MOTOROLA	BLOCK TITLE: antennas
LAST MODIFIED BY: MOTOROLA Fri Mar 31 09:15:29 2017	
MOTOROLA CONFIDENTIAL RESTRICTED	PROJECT NAME: 84016657001_a.cpm — REV: B 03
THE DRAWING ON THIS PRINT AND INFORMATION THEREWITH ARE PROPRIETARY TO MOTOROLA AND SHALL NOT BE USED OR DISCUSSED IN WHOLE OR IN PART WITHOUT MOTOROLA'S CONSENT. © COPYRIGHT, MOTOROLA. THIS DOES NOT IMPLY PUBLICATION	CAD FILE NAME: — PAGE 6 OF 91

ANT: MB DIV + GPS + WLAN 2.4GHZ +WLAN 5GHZ S1 +B41 MIMO RX4

GPS/DIV MB/WLAN 2.4GHZ S0 5GHZ S1 ANTENNA
REF:050-099

ANTENNA 3 - DIRECT FED LOOP TOP

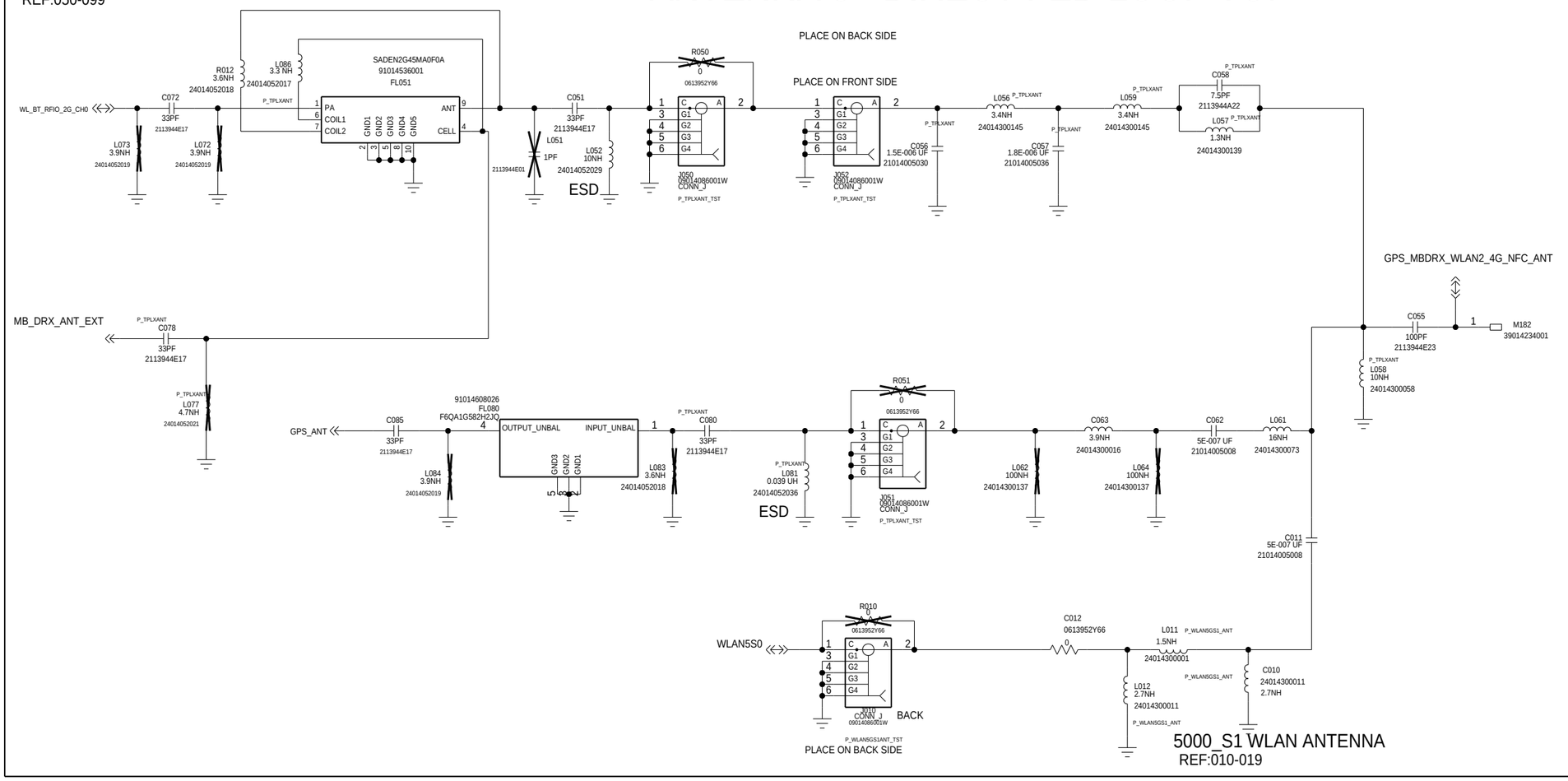

MOTOROLA MOBILITY CONFIDENTIAL RESTRICTED-MDB TRACKED TRACKEDANDBLOCKED

APPROVALS	MOTOROLA MOBILE DEVICES
ENGINEER: MOTOROLA	BLOCK TITLE: antennas
LAST MODIFIED BY: MOTOROLA Fri Mar 31 09:15:31 2017	
MOTOROLA CONFIDENTIAL RESTRICTED	B | PROJECT NAME 84016657001_a.cpm | REV 03
CAD FILE NAME:	PAGE 7 OF 91

THE DRAWING ON THIS PRINT AND INFORMATION THEREWITH ARE PROPRIETARY TO MOTOROLA AND SHALL NOT BE USED OR DISCUSSED IN WHOLE OR IN PART WITHOUT MOTOROLA'S CONSENT.
© COPYRIGHT, MOTOROLA. THIS DOES NOT IMPLY PUBLICATION

ANT: LTEU

LTEU PRX ANTENNA
REF:030-039

ANTENNA 6 - COUPLED LOOP EDGE PLATED

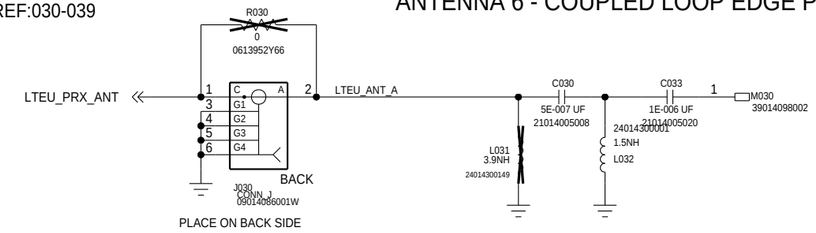

LTEU DRX ANTENNA
REF:040-049

ANTENNA 7 - EDGE PLATED ILA

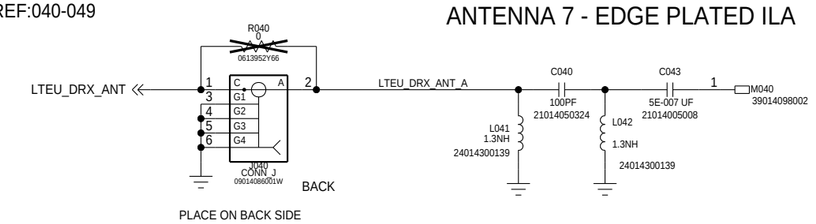

APPROVALS	MOTOROLA MOBILE DEVICES
ENGINEER: MOTOROLA	BLOCK TITLE: antennas
LAST MODIFIED BY: MOTOROLA Fri Mar 31 09:15:32 2017	

MOTOROLA CONFIDENTIAL RESTRICTED

THE DRAWING ON THIS PRINT AND INFORMATION THEREWITH ARE PROPRIETARY TO MOTOROLA AND SHALL NOT BE USED OR DISCUSSED IN WHOLE OR IN PART WITHOUT MOTOROLA'S CONSENT.
© COPYRIGHT, MOTOROLA. THIS DOES NOT IMPLY PUBLICATION

	PROJECT NAME	REV
B	84016657001_a.cpm	03
CAD FILE NAME:		PAGE 8 OF 91

ANT: SPINE COAX

REFDES: 100 - 199

TOP OF SPINE

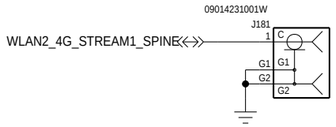

BOTTOM OF SPINE

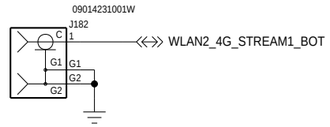

DUAL COAX CONNECTOR

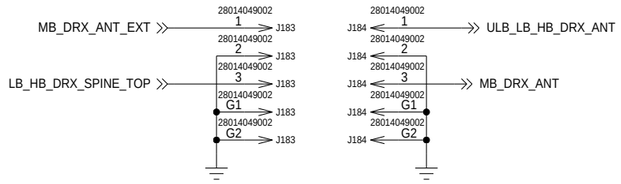

MOTOROLA MOBILITY CONFIDENTIAL RESTRICTED-MDB TRACKED TRACKEDANDBLOCKED

APPROVALS	MOTOROLA MOBILE DEVICES
ENGINEER: MOTOROLA	BLOCK TITLE: antennas
LAST MODIFIED BY: MOTOROLA Fri Mar 31 09:15:32 2017	

MOTOROLA CONFIDENTIAL RESTRICTED

THE DRAWING ON THIS PRINT AND INFORMATION THEREWITH ARE PROPRIETARY TO MOTOROLA AND SHALL NOT BE USED OR DISCUSSED IN WHOLE OR IN PART WITHOUT MOTOROLA'S CONSENT.
© COPYRIGHT, MOTOROLA. THIS DOES NOT IMPLY PUBLICATION

B	PROJECT NAME 84016657001_a.cpm	REV 03
	CAD FILE NAME:	PAGE 9 OF 91

CAM: PORTS

GPIO

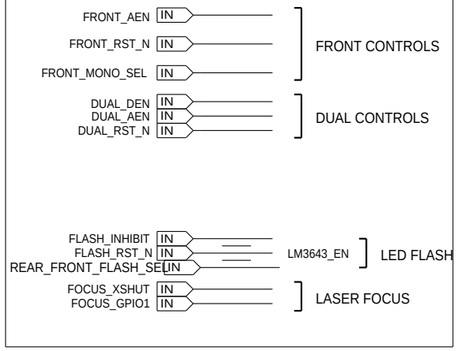

INTERFACES

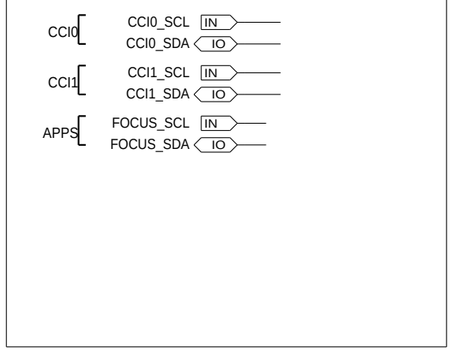

CLOCKS

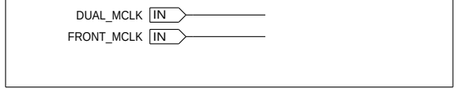

CSI OUTPUTS

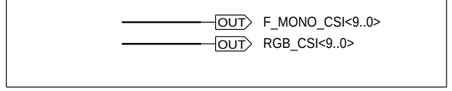

APPROVALS	MOTOROLA MOBILE DEVICES
ENGINEER: MOTOROLA	BLOCK TITLE: imagers
LAST MODIFIED BY: MOTOROLA Thu Sep 01 16:58:08 2016	

MOTOROLA CONFIDENTIAL RESTRICTED
THE DRAWING ON THIS PRINT AND INFORMATION THEREWITH ARE PROPRIETARY TO MOTOROLA AND SHALL NOT BE USED OR DISCUSSED IN WHOLE OR IN PART WITHOUT MOTOROLA'S CONSENT.
© COPYRIGHT, MOTOROLA. THIS DOES NOT IMPLY PUBLICATION

B	PROJECT NAME 84016657001_a.cpm	REV 03
	CAD FILE NAME:	PAGE 10 OF 91

CAM: POWER

REF 5500-5519

SUPPLIES

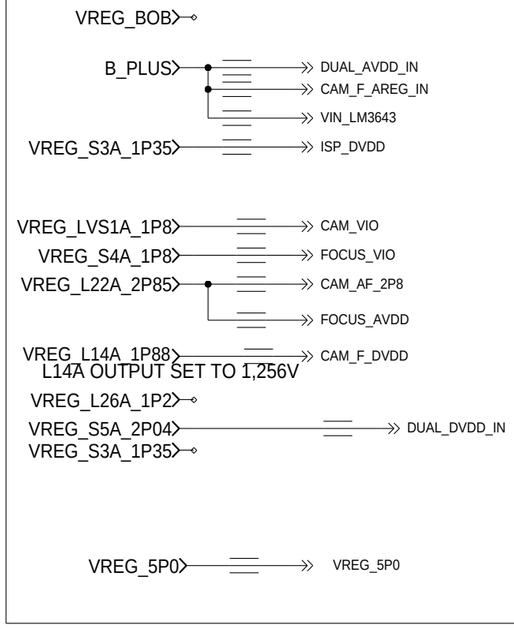

APPROVALS	MOTOROLA MOBILE DEVICES
ENGINEER: MOTOROLA	BLOCK TITLE: imagers
LAST MODIFIED BY: MOTOROLA Fri Mar 31 09:13:18 2017	
MOTOROLA CONFIDENTIAL RESTRICTED	B | PROJECT NAME 84016657001_a.cpm | REV 03
CAD FILE NAME:	PAGE 11 OF 91

THE DRAWING ON THIS PRINT AND INFORMATION THEREWITH ARE PROPRIETARY TO MOTOROLA AND SHALL NOT BE USED OR DISCUSSED IN WHOLE OR IN PART WITHOUT MOTOROLA'S CONSENT.
© COPYRIGHT, MOTOROLA. THIS DOES NOT IMPLY PUBLICATION

CAM: POWER MANAGEMENT

REF:5520-5539 MONO POWER
REF:5540-5559 RGB POWER
REF:5560-5579 FRONT POWER
REF:5580-5599 FLASH DRIVER AND LEDS

MONO ANALOG REGULATOR 2.85V

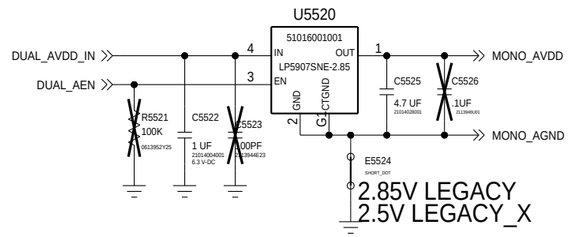

MONO DIGITAL REGULATOR 1.2V

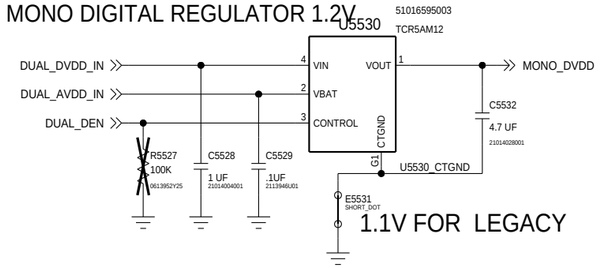

MONO AF REGULATOR 2.85V

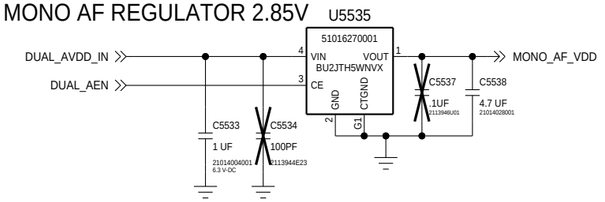

RGB ANALOG REGULATOR 2.85V

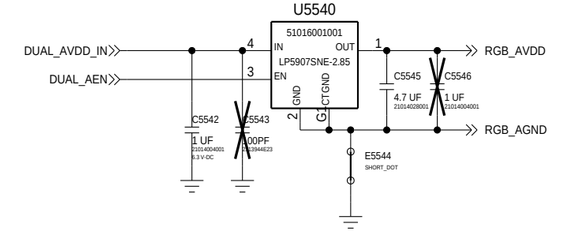

RGB DIGITAL REGULATOR 1.2V

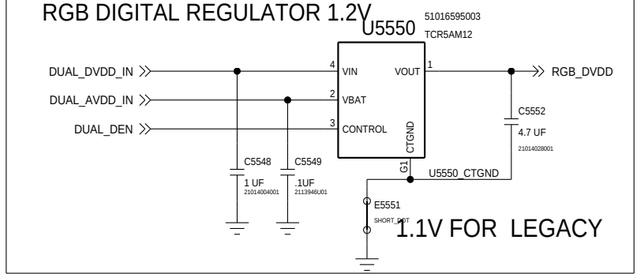

RGB AF REGULATOR 2.85V

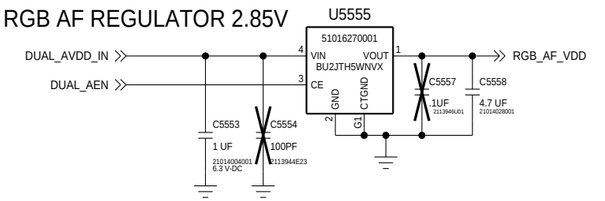

LED FLASH DRIVER FOR REAR AND FRONT IMAGERS

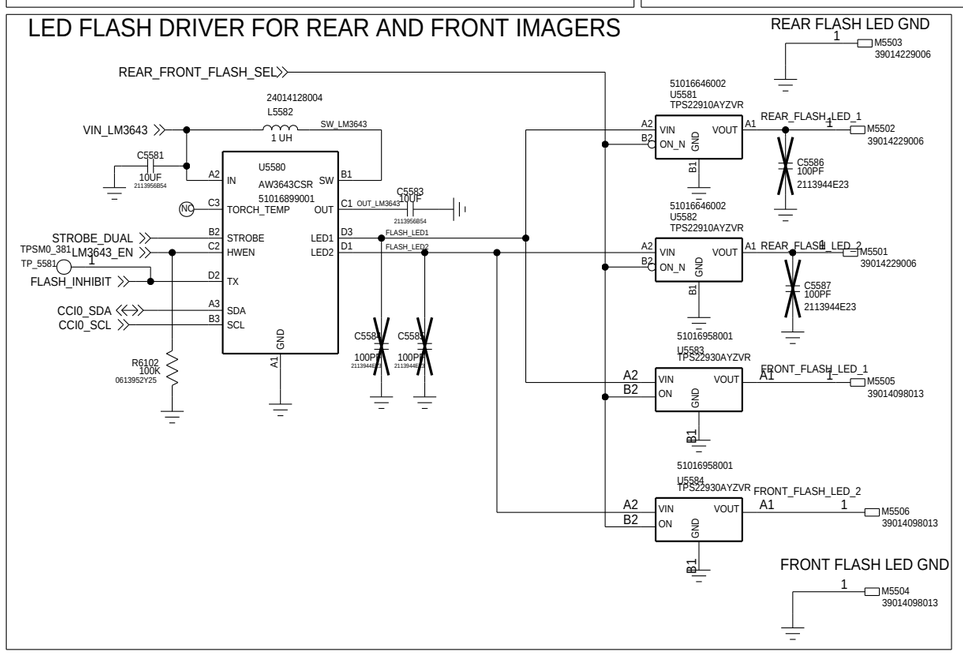

FF ANALOG REGULATOR

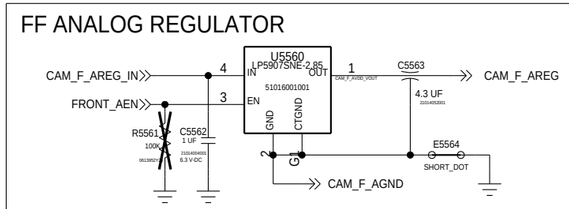

APPROVALS	MOTOROLA MOBILE DEVICES
ENGINEER: MOTOROLA	BLOCK TITLE: imagers
LAST MODIFIED BY: MOTOROLA Fri Mar 31 09:15:35 2017	
MOTOROLA CONFIDENTIAL RESTRICTED THE DRAWING ON THIS PRINT AND INFORMATION THEREWITH ARE PROPRIETARY TO MOTOROLA AND SHALL NOT BE USED OR DISCUSSED IN WHOLE OR IN PART WITHOUT MOTOROLA'S CONSENT. © COPYRIGHT, MOTOROLA. THIS DOES NOT IMPLY PUBLICATION	B — PROJECT NAME: 84016657001_a.cpm — REV: 03 CAD FILE NAME: — PAGE 12 OF 91

CAM: FRONT

REF 5600-5649

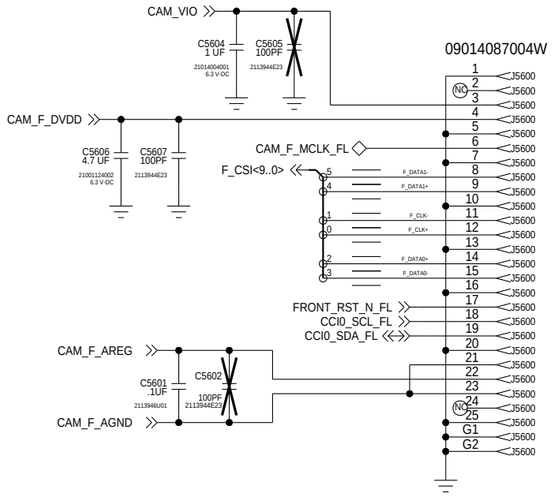

EMI/ESD FILTER

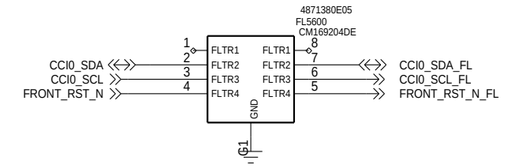

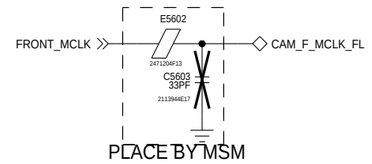

MOTOROLA MOBILITY CONFIDENTIAL RESTRICTED-MDB TRACKED TRACKEDANDBLOCKED

APPROVALS	MOTOROLA MOBILE DEVICES
ENGINEER: MOTOROLA	BLOCK TITLE: imagers
LAST MODIFIED BY: MOTOROLA Fri Mar 31 09:15:34 2017	
MOTOROLA CONFIDENTIAL RESTRICTED	B | PROJECT NAME 84016657001_a.cpm | REV 03
CAD FILE NAME:	PAGE 13 OF 91

THE DRAWING ON THIS PRINT AND INFORMATION THEREWITH ARE PROPRIETARY TO MOTOROLA AND SHALL NOT BE USED OR DISCUSSED IN WHOLE OR IN PART WITHOUT MOTOROLA'S CONSENT.
© COPYRIGHT, MOTOROLA. THIS DOES NOT IMPLY PUBLICATION

DUAL CAM: MONO

MONO MOVED TO DUAL CAM PAGE, LEAVE THIS PAGE BLANK

APPROVALS	MOTOROLA MOBILE DEVICES
ENGINEER: MOTOROLA	BLOCK TITLE: imagers
LAST MODIFIED BY: MOTOROLA Wed Aug 03 16:22:29 2016	

MOTOROLA CONFIDENTIAL RESTRICTED

THE DRAWING ON THIS PRINT AND INFORMATION THEREWITH ARE PROPRIETARY TO MOTOROLA AND SHALL NOT BE USED OR DISCUSSED IN WHOLE OR IN PART WITHOUT MOTOROLA'S CONSENT.
© COPYRIGHT, MOTOROLA. THIS DOES NOT IMPLY PUBLICATION

B	PROJECT NAME 84016657001_a.cpm	REV 03
	CAD FILE NAME:	PAGE 14 OF 91

DUAL CAM: IMX386

REF 5650-5749

09014221002W

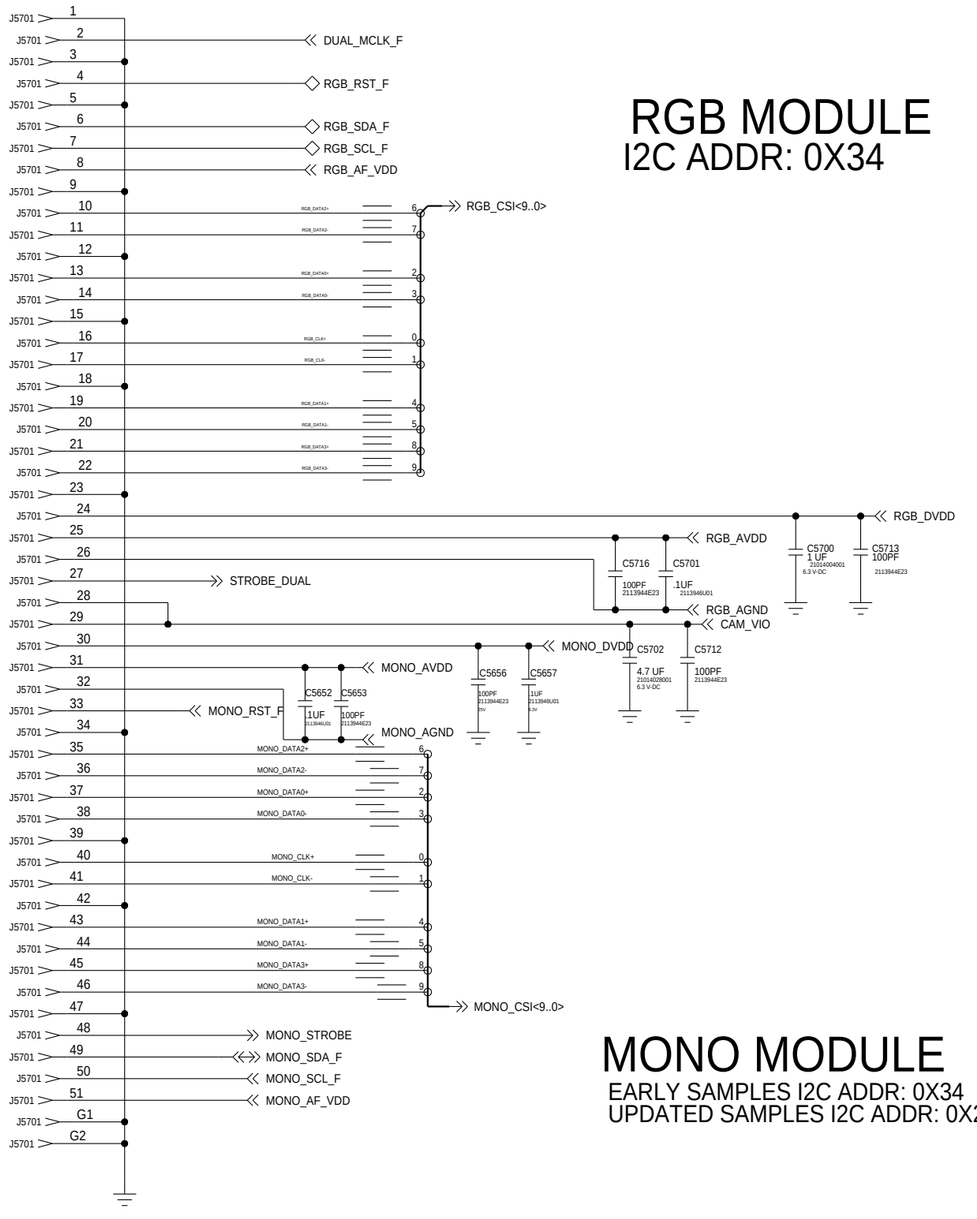

RGB MODULE

I2C ADDR: 0X34

MONO MODULE

EARLY SAMPLES I2C ADDR: 0X34

UPDATED SAMPLES I2C ADDR: 0X20

RGB EMI/ESD FILTER

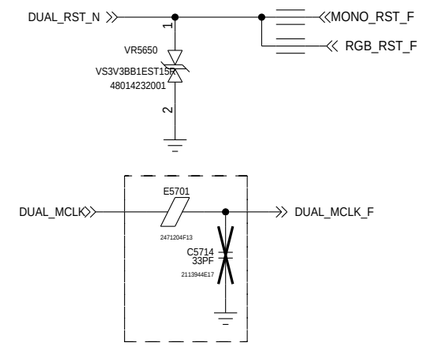

PLACE MCLK FILTER BY MSM, ZENER AT CAM CONNECTOR

MONO EMI/ESD FILTER

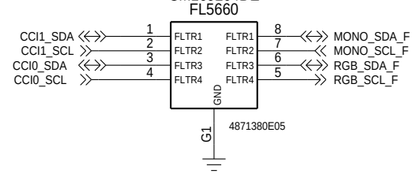

MOTOROLA MOBILITY CONFIDENTIAL RESTRICTED-MDB TRACKED TRACKEDANDBLOCKED

APPROVALS	MOTOROLA MOBILE DEVICES
ENGINEER: MOTOROLA	BLOCK TITLE: imagers
LAST MODIFIED BY: MOTOROLA Fri Mar 31 09:15:36 2017	
MOTOROLA CONFIDENTIAL RESTRICTED	B | PROJECT NAME 84016657001_a.cpm | REV 03
CAD FILE NAME:	PAGE 15 OF 91

THE DRAWING ON THIS PRINT AND INFORMATION THEREWITH ARE PROPRIETARY TO MOTOROLA AND SHALL NOT BE USED OR DISCUSSED IN WHOLE OR IN PART WITHOUT MOTOROLA'S CONSENT.
© COPYRIGHT, MOTOROLA. THIS DOES NOT IMPLY PUBLICATION

DUAL CAM: AL3200 ISP
REF:5900-5999

AL3200 ISP DELETED

F_MONO_CSI<9..0> FROM MONO/FRONT MIPI SWITCH F_MONO_CSI<9..0>

RGB_CSI<9..0> FROM RGB MODULE RGB_CSI<9..0>

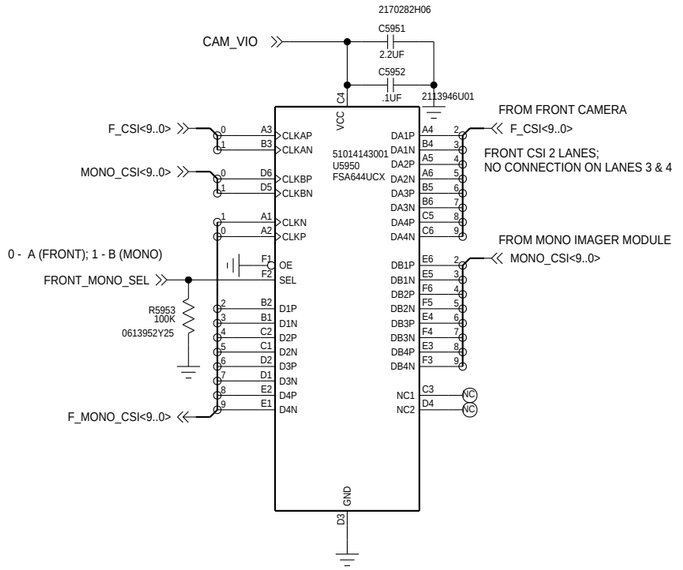

FRONT/MONO CSI SWITCH

APPROVALS	MOTOROLA MOBILE DEVICES
ENGINEER: MOTOROLA	BLOCK TITLE: imagers
LAST MODIFIED BY: MOTOROLA Fri Mar 31 09:15:38 2017	
MOTOROLA CONFIDENTIAL RESTRICTED	B | PROJECT NAME 84016657001_a.cpm | REV 03
THE DRAWING ON THIS PRINT AND INFORMATION THEREWITH ARE PROPRIETARY TO MOTOROLA AND SHALL NOT BE USED OR DISCUSSED IN WHOLE OR IN PART WITHOUT MOTOROLA'S CONSENT. © COPYRIGHT, MOTOROLA. THIS DOES NOT IMPLY PUBLICATION	CAD FILE NAME: | PAGE 16 OF 91

CAM: FOCUS

REF: 5800-5899

PLACE PULLUPS R5801 NEAR PM AND R5802 NEAR MSM TO REDUCE PARTS AT TOP.

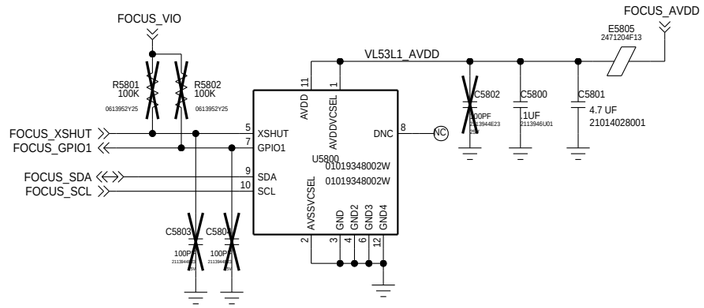

I2C ADDRESS: 0X29

APPROVALS	MOTOROLA MOBILE DEVICES
ENGINEER: MOTOROLA	BLOCK TITLE: imagers
LAST MODIFIED BY: MOTOROLA Fri Mar 31 09:15:37 2017	
MOTOROLA CONFIDENTIAL RESTRICTED THE DRAWING ON THIS PRINT AND INFORMATION THEREWITH ARE PROPRIETARY TO MOTOROLA AND SHALL NOT BE USED OR DISCUSSED IN WHOLE OR IN PART WITHOUT MOTOROLA'S CONSENT. © COPYRIGHT, MOTOROLA. THIS DOES NOT IMPLY PUBLICATION	B | PROJECT NAME 84016657001_a.cpm | REV 03 CAD FILE NAME: | PAGE 17 OF 91

DISP: PORTS

REF 5000-5499

POWER

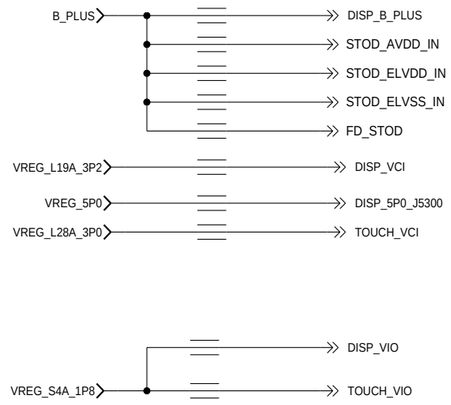

INPUTS

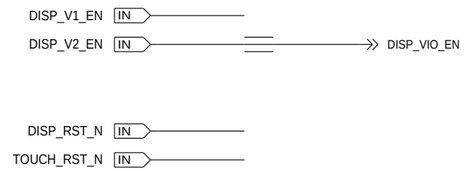

OUTPUTS

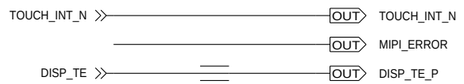

INTERFACES

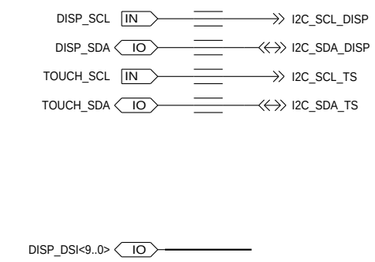

APPROVALS	MOTOROLA MOBILE DEVICES
ENGINEER: MOTOROLA	BLOCK TITLE: display
LAST MODIFIED BY: MOTOROLA Fri Mar 31 09:13:15 2017	
MOTOROLA CONFIDENTIAL RESTRICTED	B | PROJECT NAME 84016657001_a.cpm | REV 03
CAD FILE NAME:	PAGE 18 OF 91

THE DRAWING ON THIS PRINT AND INFORMATION THEREWITH ARE PROPRIETARY TO MOTOROLA AND SHALL NOT BE USED OR DISCUSSED IN WHOLE OR IN PART WITHOUT MOTOROLA'S CONSENT.
© COPYRIGHT, MOTOROLA. THIS DOES NOT IMPLY PUBLICATION

DISP: POWER

REF 5000-5499

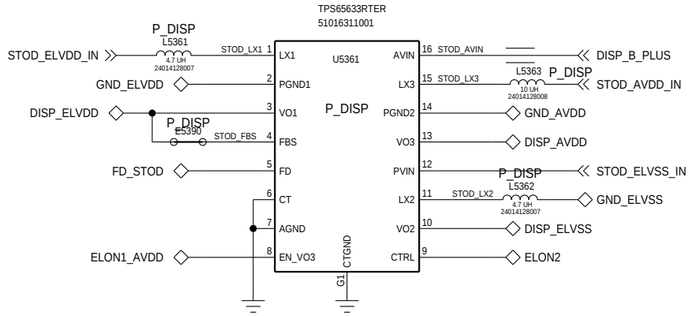

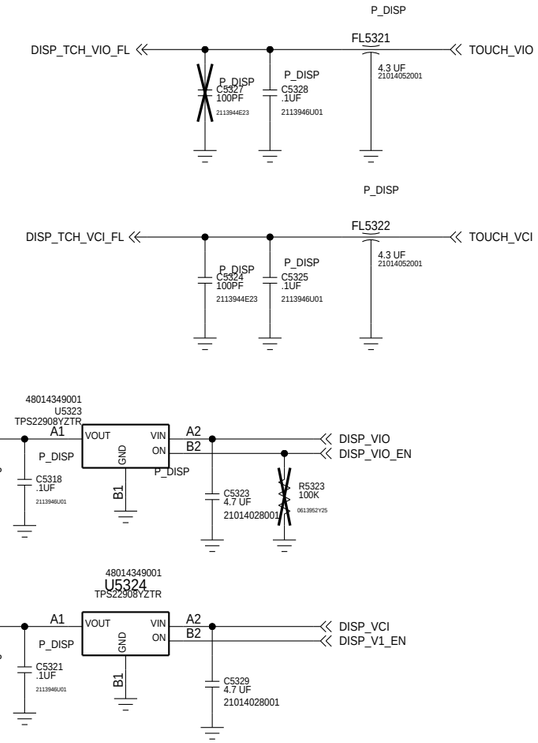

APPROVALS	MOTOROLA MOBILE DEVICES
ENGINEER: MOTOROLA	BLOCK TITLE: display
LAST MODIFIED BY: MOTOROLA Fri Mar 31 09:15:39 2017	
MOTOROLA CONFIDENTIAL RESTRICTED THE DRAWING ON THIS PRINT AND INFORMATION THEREWITH ARE PROPRIETARY TO MOTOROLA AND SHALL NOT BE USED OR DISCUSSED IN WHOLE OR IN PART WITHOUT MOTOROLA'S CONSENT. © COPYRIGHT, MOTOROLA. THIS DOES NOT IMPLY PUBLICATION	B · PROJECT NAME: 84016657001_a.cpm · REV: 03 CAD FILE NAME: · PAGE 19 OF 91

DISP: CONNECTOR

REF 5300-5349

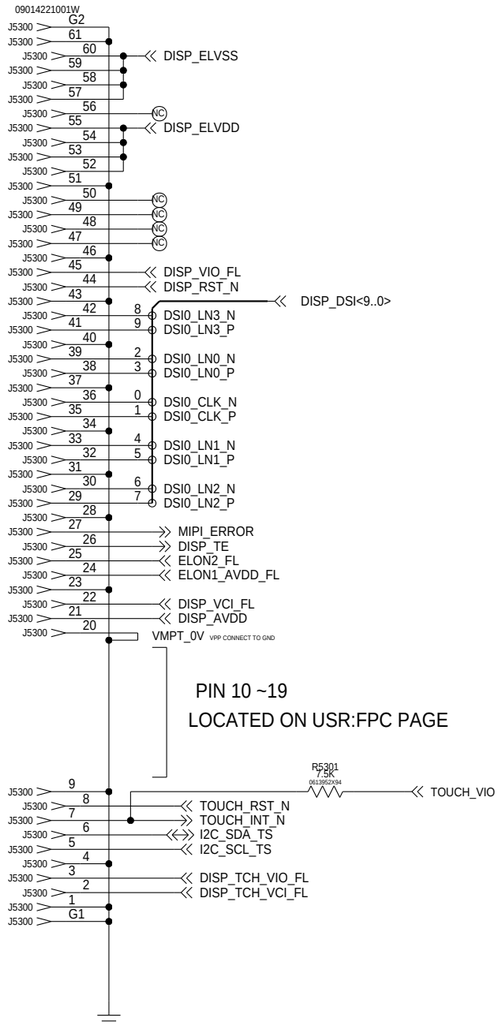

MOTOROLA MOBILITY CONFIDENTIAL RESTRICTED-MDB TRACKED TRACKEDANDBLOCKED

APPROVALS	MOTOROLA MOBILE DEVICES
ENGINEER: MOTOROLA	BLOCK TITLE: display
LAST MODIFIED BY: MOTOROLA Fri Mar 31 09:15:40 2017	
MOTOROLA CONFIDENTIAL RESTRICTED	B / PROJECT NAME: 84016657001_a.cpm / REV: 03
CAD FILE NAME:	PAGE 20 OF 91

THE DRAWING ON THIS PRINT AND INFORMATION THEREWITH ARE PROPRIETARY TO MOTOROLA AND SHALL NOT BE USED OR DISCUSSED IN WHOLE OR IN PART WITHOUT MOTOROLA'S CONSENT.
© COPYRIGHT, MOTOROLA. THIS DOES NOT IMPLY PUBLICATION

PWR: PORTS

REF 500-699

POWER

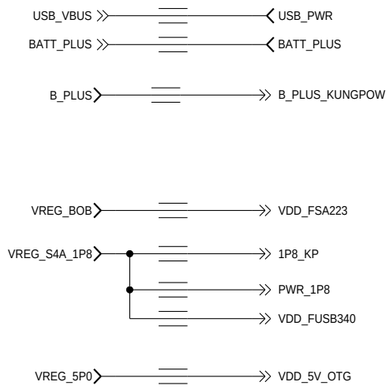

WING

CURRENT DRAIN

INPUTS

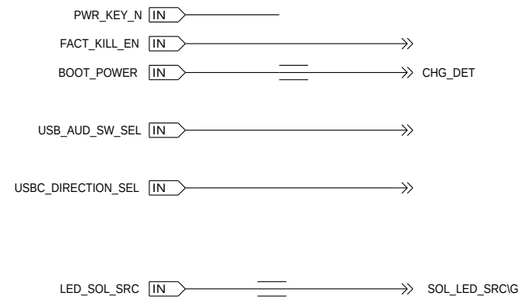

INTERFACES

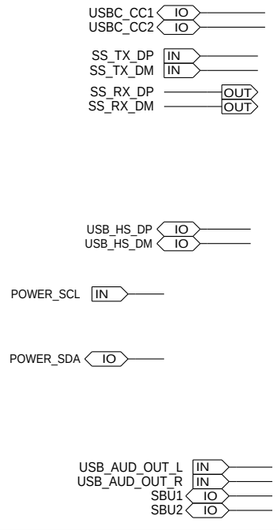

OUTPUTS

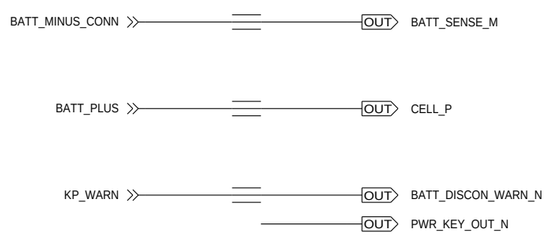

APPROVALS	MOTOROLA MOBILE DEVICES
ENGINEER: MOTOROLA	BLOCK TITLE: power
LAST MODIFIED BY: MOTOROLA Fri Mar 31 09:13:07 2017	
MOTOROLA CONFIDENTIAL RESTRICTED	PROJECT NAME: B 84016657001_a.cpm — REV: 03
THE DRAWING ON THIS PRINT AND INFORMATION THEREWITH ARE PROPRIETARY TO MOTOROLA AND SHALL NOT BE USED OR DISCUSSED IN WHOLE OR IN PART WITHOUT MOTOROLA'S CONSENT.	CAD FILE NAME: — PAGE 21 OF 91

© COPYRIGHT, MOTOROLA. THIS DOES NOT IMPLY PUBLICATION

PWR: BATT

REF: 510-519, 650-659

BATTERY BLOCK (VECTOR)

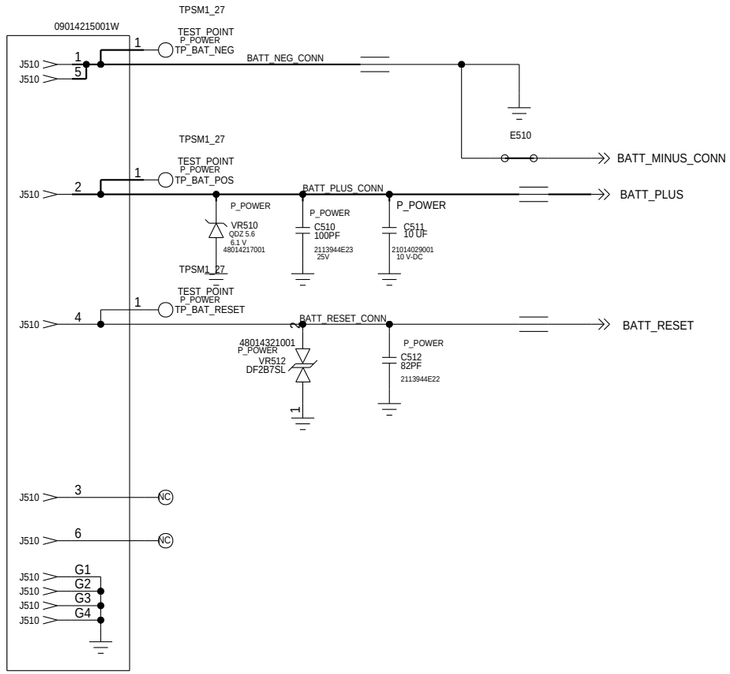

KUNG KOW BATTERY DISCONNECT

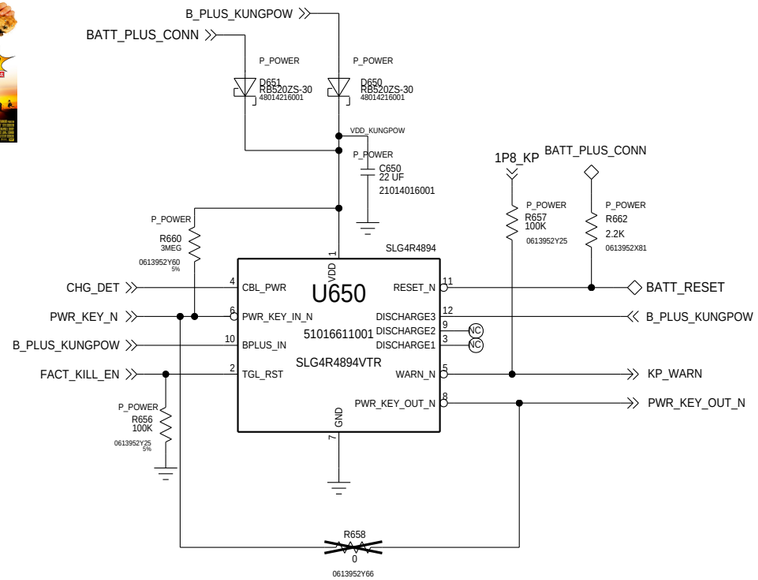

AUX_THERM

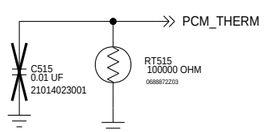

BATT_THERM

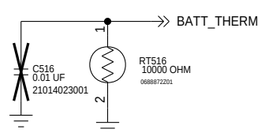

MOTOROLA MOBILITY CONFIDENTIAL RESTRICTED-MDB TRACKED TRACKEDANDBLOCKED

APPROVALS	MOTOROLA MOBILE DEVICES
ENGINEER: MOTOROLA	BLOCK TITLE: power
LAST MODIFIED BY: MOTOROLA Fri Mar 31 09:15:42 2017	
MOTOROLA CONFIDENTIAL RESTRICTED	B | PROJECT NAME 84016657001_a.cpm | REV 03
CAD FILE NAME:	PAGE 22 OF 91

THE DRAWING ON THIS PRINT AND INFORMATION THEREWITH ARE PROPRIETARY TO MOTOROLA AND SHALL NOT BE USED OR DISCUSSED IN WHOLE OR IN PART WITHOUT MOTOROLA'S CONSENT.
© COPYRIGHT, MOTOROLA. THIS DOES NOT IMPLY PUBLICATION

PWR: USB TYPE C

REF: 500-509,520-539,550-559

TYPE-C CONNECTOR

REF: 500-509

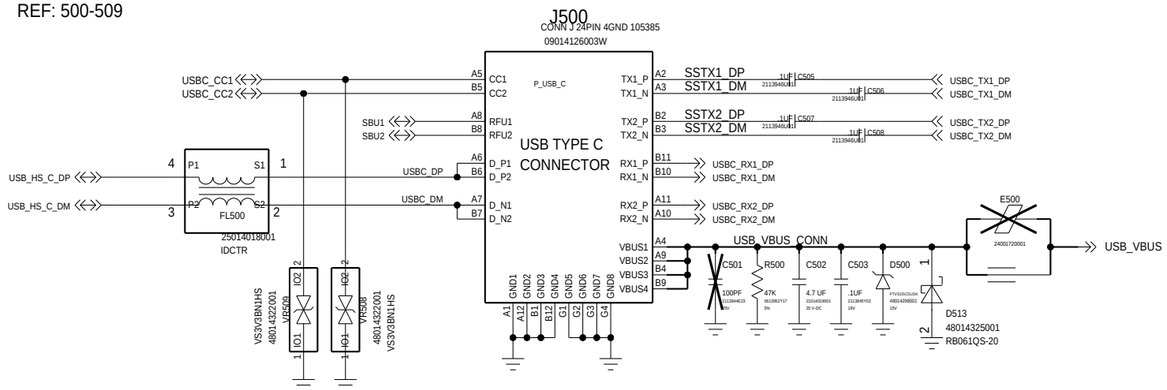

USB SS MUX

REF: 530-539

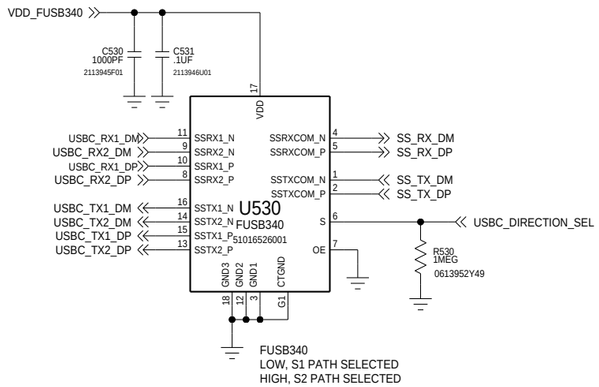

OTG LOAD SWITCH

REF: 550-559

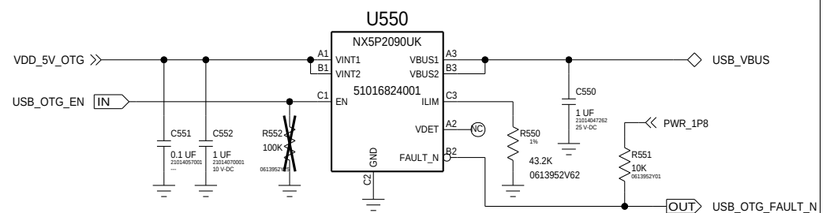

USB HS / HSJ AUDIO MUX

REF: 520-529

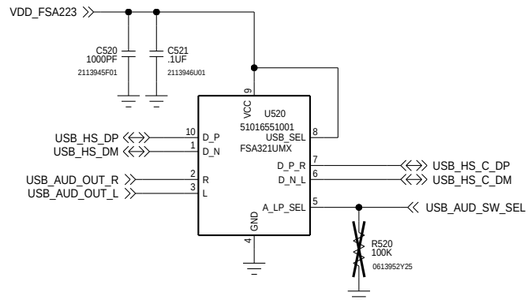

USB SS/HS/SBU ESD

REF: 500-509

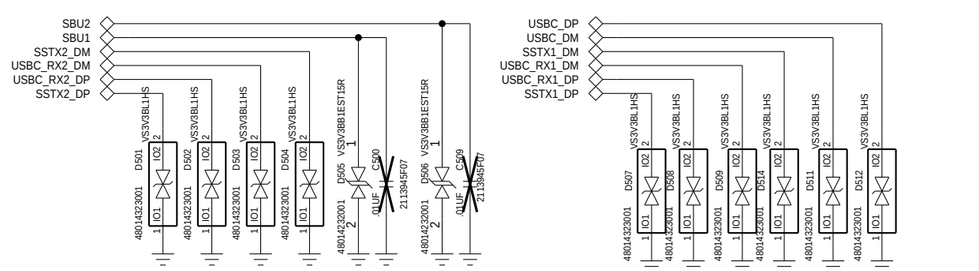

MOTOROLA MOBILITY CONFIDENTIAL RESTRICTED-MDB TRACKED TRACKEDANDBLOCKED

APPROVALS	MOTOROLA MOBILE DEVICES
ENGINEER: MOTOROLA	BLOCK TITLE: power
LAST MODIFIED BY: MOTOROLA Fri Mar 31 09:15:43 2017	
MOTOROLA CONFIDENTIAL RESTRICTED	PROJECT NAME: B 84016657001_a.cpm; REV: 03
CAD FILE NAME:	PAGE 23 OF 91

THE DRAWING ON THIS PRINT AND INFORMATION THEREWITH ARE PROPRIETARY TO MOTOROLA AND SHALL NOT BE USED OR DISCUSSED IN WHOLE OR IN PART WITHOUT MOTOROLA'S CONSENT.
© COPYRIGHT, MOTOROLA. THIS DOES NOT IMPLY PUBLICATION

PWR: LIGHTING

SOL LED
REF: 610-619

D610 MOVED TO PROX ZIF

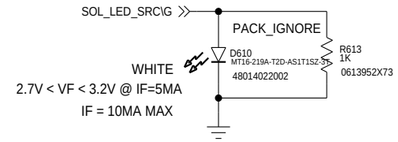

MOTOROLA MOBILITY CONFIDENTIAL RESTRICTED-MDB TRACKED TRACKEDANDBLOCKED

APPROVALS	MOTOROLA MOBILE DEVICES
ENGINEER: MOTOROLA	BLOCK TITLE: power
LAST MODIFIED BY: MOTOROLA Fri Mar 31 09:15:44 2017	

MOTOROLA CONFIDENTIAL RESTRICTED

THE DRAWING ON THIS PRINT AND INFORMATION THEREWITH ARE PROPRIETARY TO MOTOROLA AND SHALL NOT BE USED OR DISCUSSED IN WHOLE OR IN PART WITHOUT MOTOROLA'S CONSENT.
© COPYRIGHT, MOTOROLA. THIS DOES NOT IMPLY PUBLICATION

B	PROJECT NAME 84016657001_a.cpm	REV 03
	CAD FILE NAME:	PAGE 24 OF 91

CONN: PORTS

REF 4000-4499

WL INTERFACE

SLEEP_CLK_IN	IN	
RF_CLK2_IN	IN	
WL_BB<7..0>	IN	
WL_CMD<3..0>	IN	
WL_REF_CLK_OUT	OUT	
WLAN_SW_CTRL	OUT	

ANTENNA

5GS0	IO	WLAN_5G_S0
5GS1	IO	WLAN_5G_S1
2_4GS1	IO	WLAN_2400_S1
2_4GS0	IO	BT_WLAN_2400_S0
NFC_ANT_1	IO	
NFC_ANT_2	IO	

BT/FM INTERFACE

BT_UART_TX	OUT	
BT_UART_RX	IN	
BT_UART_CTS_N	IN	
BT_UART_RTS_N	OUT	
BTFM_CLK_IN	IN	
BTFM_DATA	IO	

SDCARD

SDC_CLK	IN	CLK_SDC
SDC_DET_N	OUT	SW_SDC
SDC_CMD	IN	CMD_SDC
SDC_DATA<3..0>	IO	DATA_SDC<3..0>

UIM1

UIM1_DATA	IO
UIM1_CLK	IN
UIM1_RST	IN
UIM_DET	OUT

COEXISTENCE

CXM_CMD<1..0>	IO
MSS_CMD<1..0>	IO

UIM2

UIM2_DATA	IO
UIM2_CLK	IN
UIM2_RST	IN
UIM2_SWP	

NFC

NFC_ENABLE_IN	IN
NFC_IRQ_OUT	OUT
NFC_SCL	IN
NFC_SDA	IO
NFC_POWER_ON	IN
NFC_DL_REQ_IN	IN
NFC_CLK_REQ	OUT
NFC_CLK_IN	IN

SSC

SENS_RXD_IN	IN
SENS_TXD_OUT	OUT

APPROVALS	MOTOROLA MOBILE DEVICES
ENGINEER: MOTOROLA	BLOCK TITLE: connectivity
LAST MODIFIED BY: MOTOROLA Tue Aug 09 10:37:33 2016	

MOTOROLA CONFIDENTIAL RESTRICTED
THE DRAWING ON THIS PRINT AND INFORMATION THEREWITH ARE PROPRIETARY TO MOTOROLA AND SHALL NOT BE USED OR DISCUSSED IN WHOLE OR IN PART WITHOUT MOTOROLA'S CONSENT.
© COPYRIGHT, MOTOROLA. THIS DOES NOT IMPLY PUBLICATION

	PROJECT NAME	REV
B	84016657001_a.cpm	03
CAD FILE NAME:		PAGE 25 OF 91

CONN: POWER

REF 4490-4499

POWER

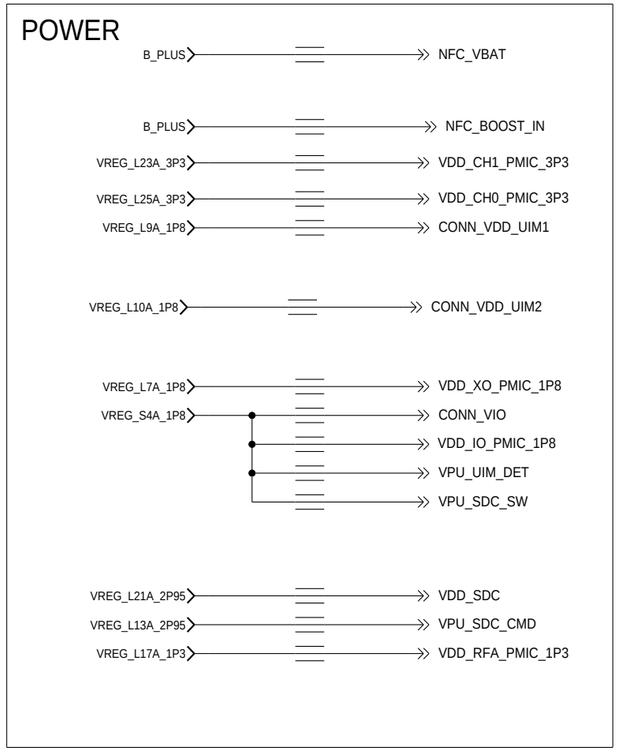

APPROVALS	MOTOROLA MOBILE DEVICES
ENGINEER: MOTOROLA	BLOCK TITLE: connectivity
LAST MODIFIED BY: MOTOROLA Fri Mar 31 09:12:58 2017	
MOTOROLA CONFIDENTIAL RESTRICTED	B | PROJECT NAME 84016657001_a.cpm | REV 03
CAD FILE NAME:	PAGE 26 OF 91

THE DRAWING ON THIS PRINT AND INFORMATION THEREWITH ARE PROPRIETARY TO MOTOROLA AND SHALL NOT BE USED OR DISCUSSED IN WHOLE OR IN PART WITHOUT MOTOROLA'S CONSENT.
© COPYRIGHT, MOTOROLA. THIS DOES NOT IMPLY PUBLICATION

CONN: WCN3990 RF/INTERFACES

REF: 4000-4099

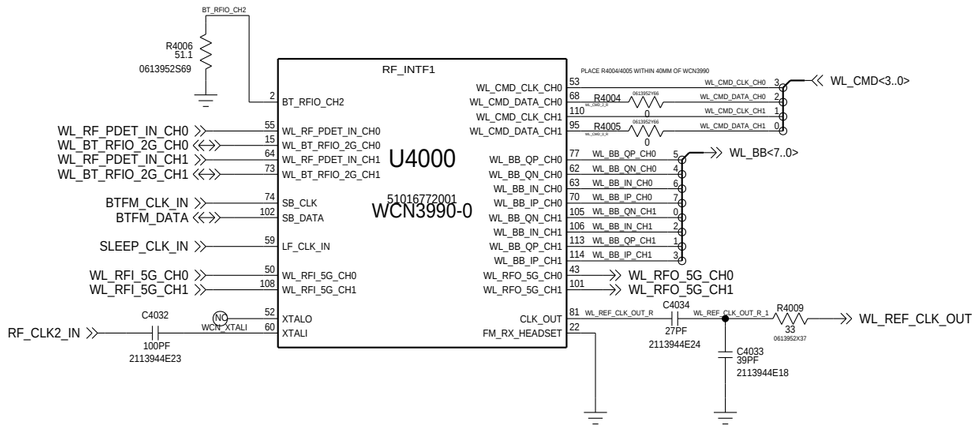

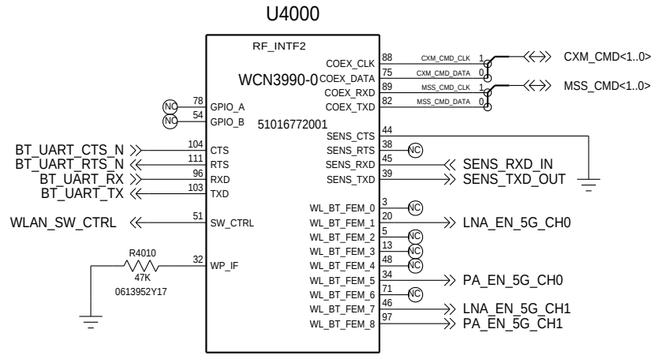

5 GHZ FEMS

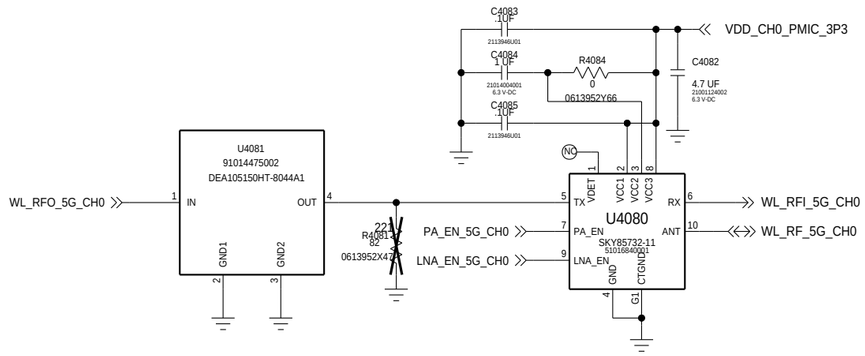

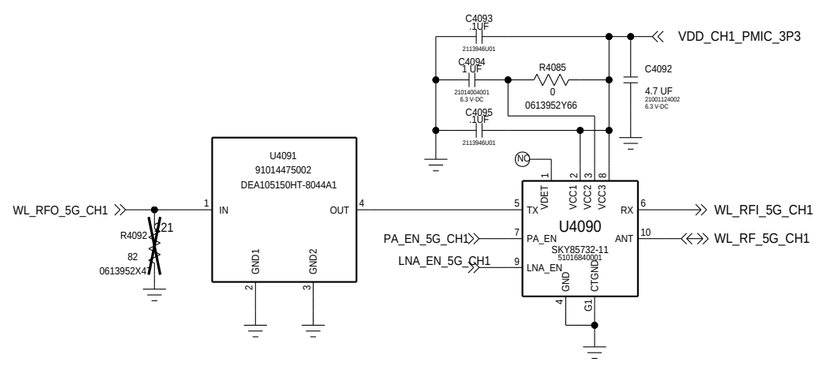

BASED ON 80-WL020-41 REV. B

MOTOROLA MOBILITY CONFIDENTIAL RESTRICTED-MDB TRACKED TRACKEDANDBLOCKED

APPROVALS	MOTOROLA MOBILE DEVICES
ENGINEER: MOTOROLA	BLOCK TITLE: connectivity
LAST MODIFIED BY: MOTOROLA Sun Apr 09 17:14:36 2017	

MOTOROLA CONFIDENTIAL RESTRICTED

THE DRAWING ON THIS PRINT AND INFORMATION THEREWITH ARE PROPRIETARY TO MOTOROLA AND SHALL NOT BE USED OR DISCUSSED IN WHOLE OR IN PART WITHOUT MOTOROLA'S CONSENT.
© COPYRIGHT, MOTOROLA. THIS DOES NOT IMPLY PUBLICATION

B	PROJECT NAME 84016657001_a.cpm	REV 03
CAD FILE NAME:		PAGE 27 OF 91

CONN: WCN3990 POWER/GND

REF 4000-4029

BT_FM_WLAN_1P3

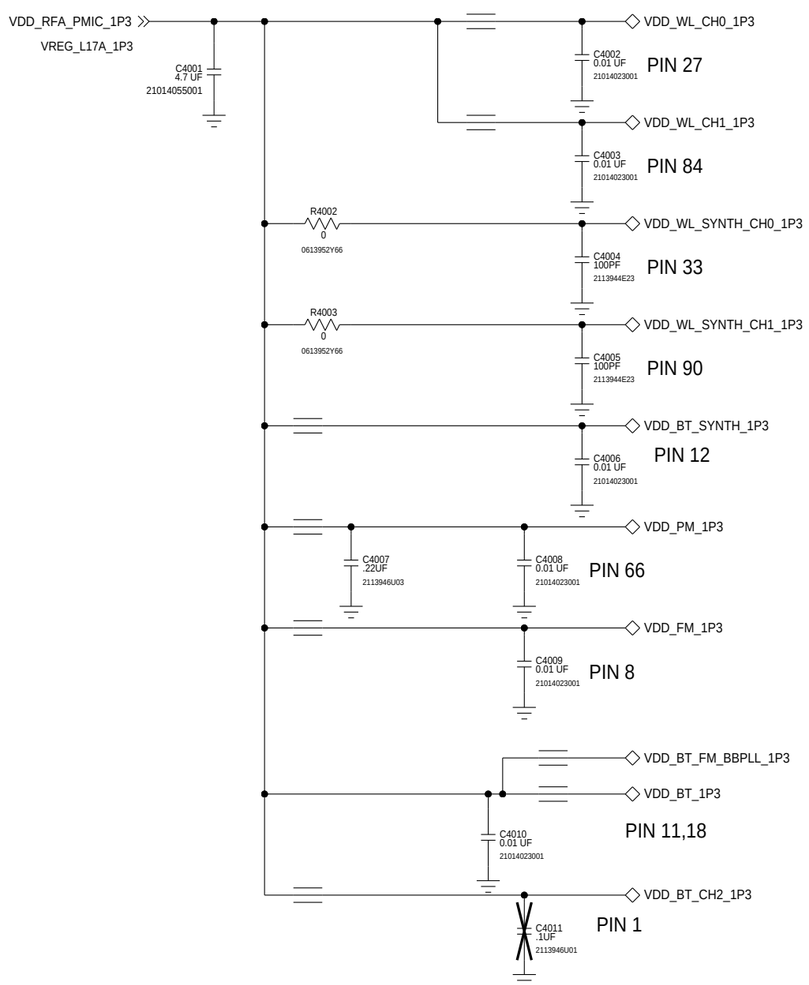

1.8V

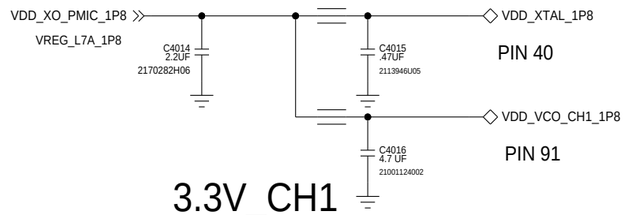

3.3V_CH1

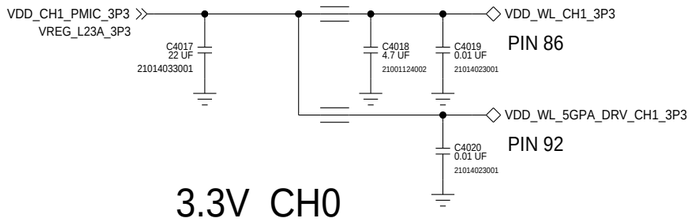

3.3V_CH0

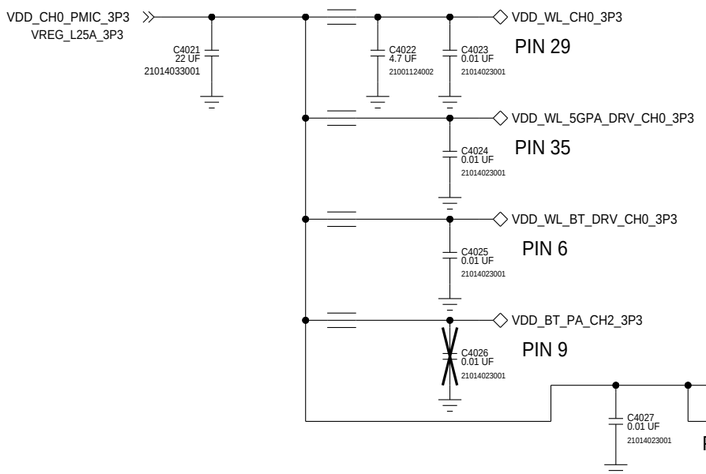

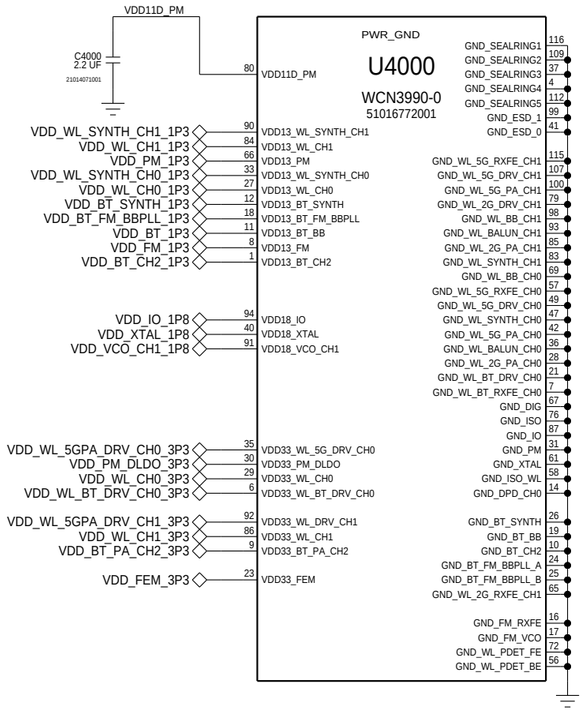

MOTOROLA MOBILITY CONFIDENTIAL RESTRICTED-MDB TRACKED TRACKEDANDBLOCKED

APPROVALS	MOTOROLA MOBILE DEVICES
ENGINEER: MOTOROLA	BLOCK TITLE: connectivity
LAST MODIFIED BY: MOTOROLA Fri Mar 31 09:15:50 2017	
MOTOROLA CONFIDENTIAL RESTRICTED	B | PROJECT NAME 84016657001_a.cpm | REV 03
CAD FILE NAME:	PAGE 28 OF 91

THE DRAWING ON THIS PRINT AND INFORMATION THEREWITH ARE PROPRIETARY TO MOTOROLA AND SHALL NOT BE USED OR DISCUSSED IN WHOLE OR IN PART WITHOUT MOTOROLA'S CONSENT.
© COPYRIGHT, MOTOROLA. THIS DOES NOT IMPLY PUBLICATION

BASED ON 80-WL020-41 REV. B

CONN: WCN3990 RADIO

REF 4040-4099

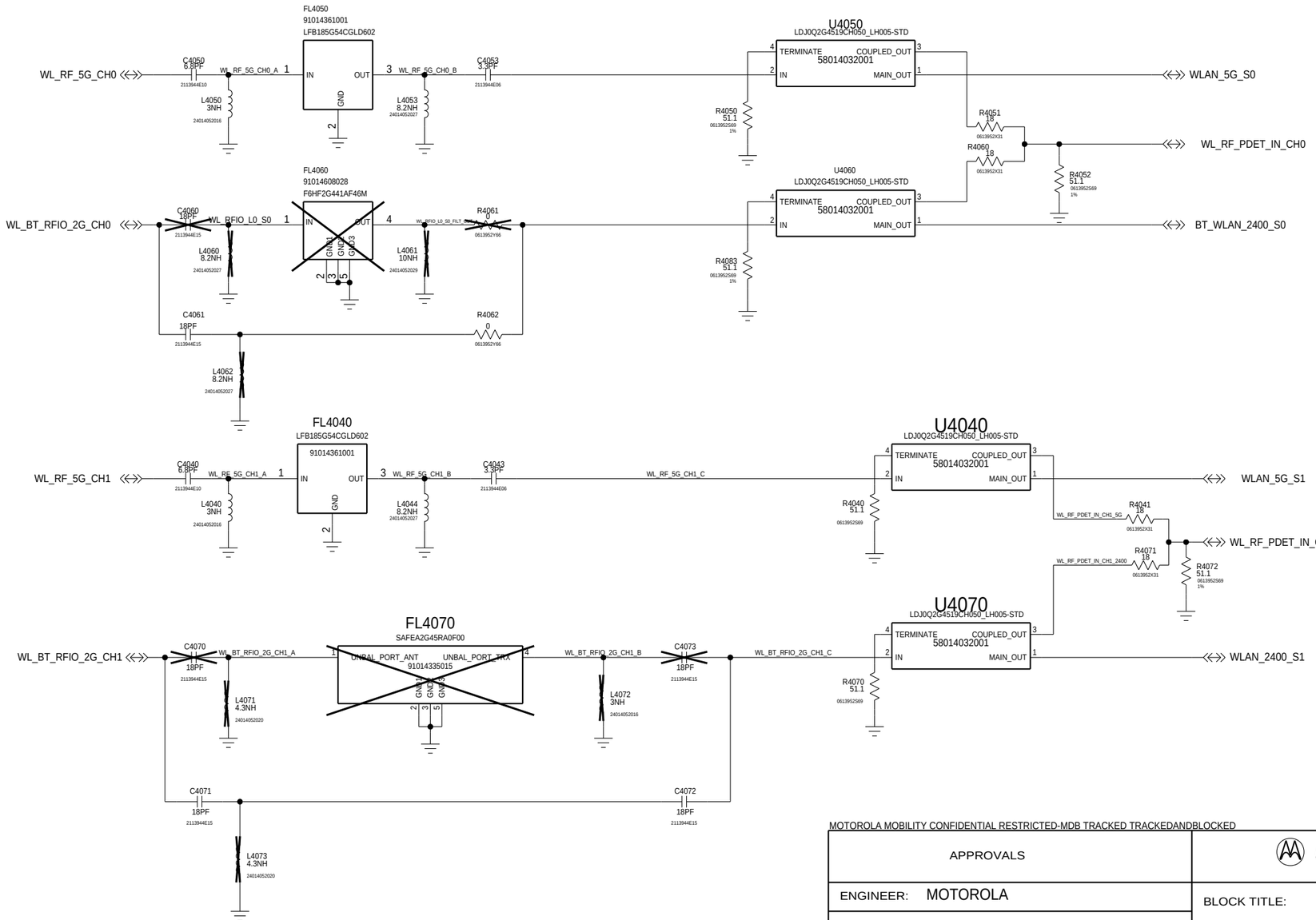

MOTOROLA MOBILITY CONFIDENTIAL RESTRICTED-MDB TRACKED TRACKEDANDBLOCKED

APPROVALS	MOTOROLA MOBILE DEVICES
ENGINEER: MOTOROLA	BLOCK TITLE: connectivity
LAST MODIFIED BY: MOTOROLA Fri Mar 31 09:15:45 2017	
MOTOROLA CONFIDENTIAL RESTRICTED	B | PROJECT NAME: 84016657001_a.cpm | REV: 03
CAD FILE NAME:	PAGE 29 OF 91

THE DRAWING ON THIS PRINT AND INFORMATION THEREWITH ARE PROPRIETARY TO MOTOROLA AND SHALL NOT BE USED OR DISCUSSED IN WHOLE OR IN PART WITHOUT MOTOROLA'S CONSENT.
© COPYRIGHT, MOTOROLA. THIS DOES NOT IMPLY PUBLICATION

CONN: PN553 NFC

REF: 4100-4199

PN548 I2C ADDRESS MAP

HIF2	HIF1	BASE	WRITE	READ
LOW	LOW	0X28	0X50	0X51
LOW	HIGH	0X29	0X52	0X53
HIGH	LOW	0X2A	0X54	0X55
HIGH	HIGH	0X2B	0X56	0X57

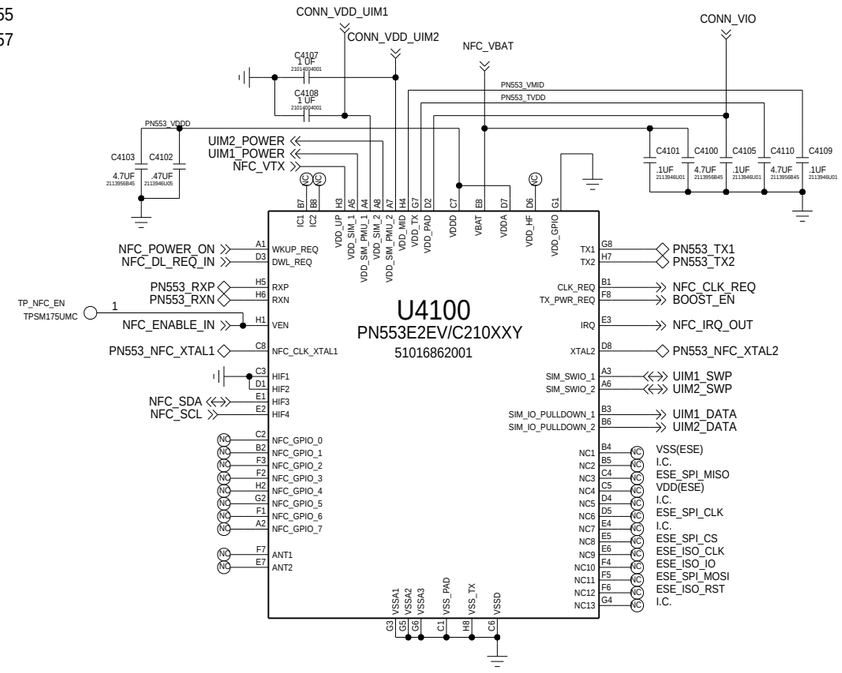

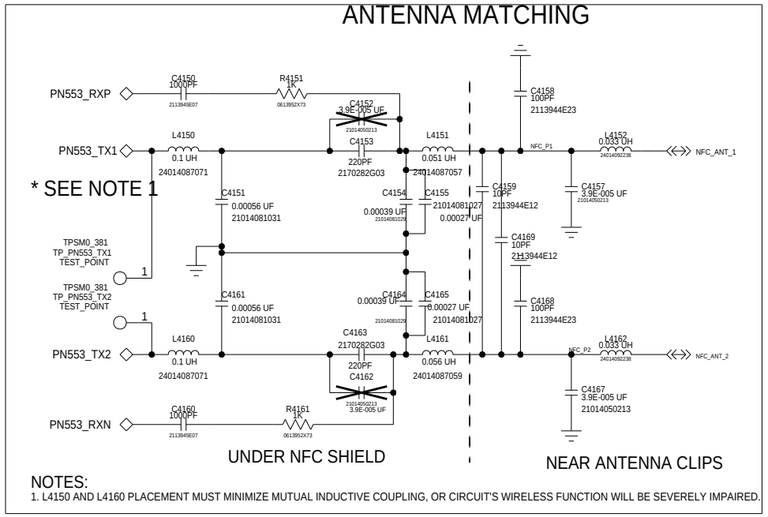

REFERENCE DESIGNATOR 27.12 MHZ CRYSTAL OSCILLATOR 19.2 MHZ EXTERNAL CLOCK

C4130	PLACE	DNI
C4131	PLACE	DNI
C4190	DNI	PLACE
Y4100	PLACE	DNI

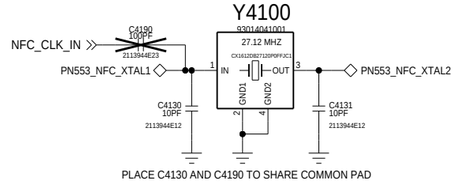

PLACE C4130 AND C4190 TO SHARE COMMON PAD

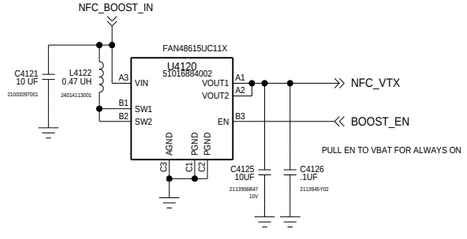

EXTERNAL 5V SWITCHER FOR NFC BOOST SUPPLY, CONTROLLED FROM TX_PWR_REQ OUTPUT OF PN548.

APPROVALS	MOTOROLA MOBILE DEVICES
ENGINEER: MOTOROLA	BLOCK TITLE: connectivity
LAST MODIFIED BY: MOTOROLA Fri Mar 31 09:15:47 2017	
MOTOROLA CONFIDENTIAL RESTRICTED	PROJECT NAME: 84016657001_a.cpm / REV: B 03
THE DRAWING ON THIS PRINT AND INFORMATION THEREWITH ARE PROPRIETARY TO MOTOROLA AND SHALL NOT BE USED OR DISCUSSED IN WHOLE OR IN PART WITHOUT MOTOROLA'S CONSENT. © COPYRIGHT, MOTOROLA. THIS DOES NOT IMPLY PUBLICATION	CAD FILE NAME: / PAGE 30 OF 91

CONN: UIM1 / UIM2 / SD

REF:4200-4299

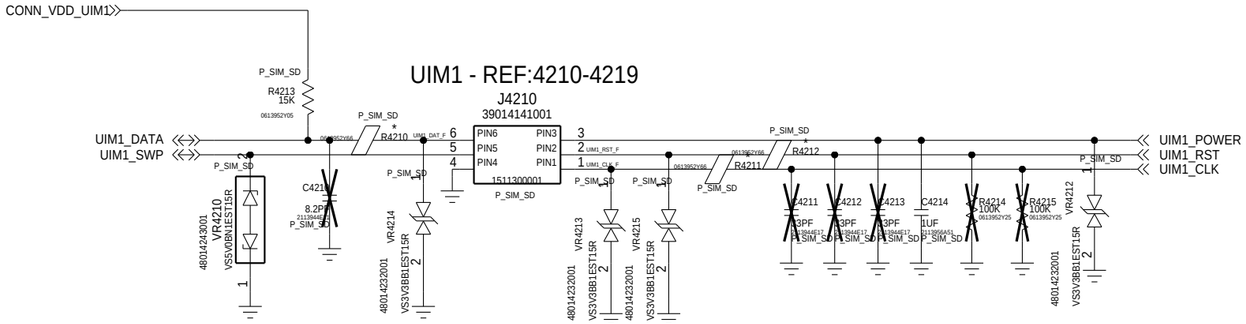

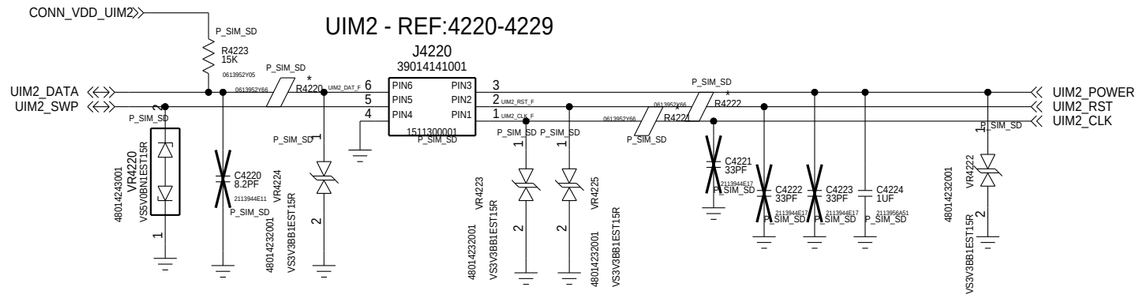

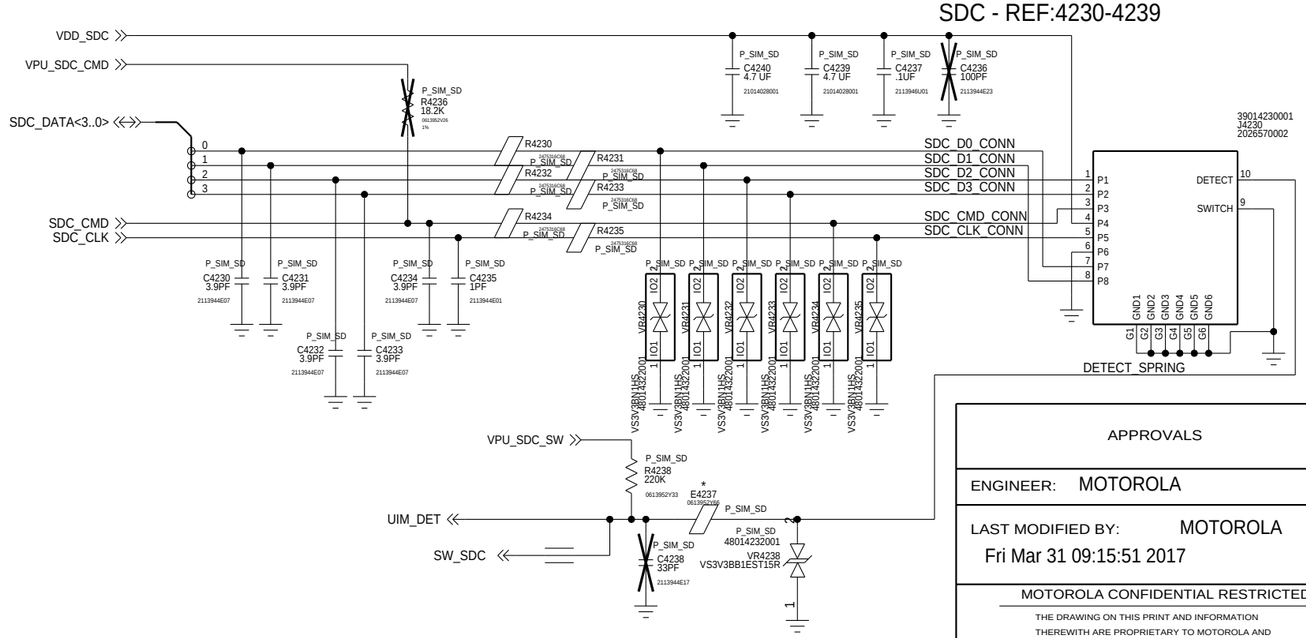

TRAY INSERTED = SWITCH CLOSED = LOGIC L
TRAY REMOVED = SWITCH OPEN = LOGIC H

APPROVALS	MOTOROLA MOBILE DEVICES
ENGINEER: MOTOROLA	BLOCK TITLE: connectivity
LAST MODIFIED BY: MOTOROLA Fri Mar 31 09:15:51 2017	
MOTOROLA CONFIDENTIAL RESTRICTED	B | PROJECT NAME 84016657001_a.cpm | REV 03
CAD FILE NAME:	PAGE 31 OF 91

THE DRAWING ON THIS PRINT AND INFORMATION THEREWITH ARE PROPRIETARY TO MOTOROLA AND SHALL NOT BE USED OR DISCUSSED IN WHOLE OR IN PART WITHOUT MOTOROLA'S CONSENT.
© COPYRIGHT, MOTOROLA. THIS DOES NOT IMPLY PUBLICATION

XMCS: POWER

REF 6000-6999

SUPPLIES

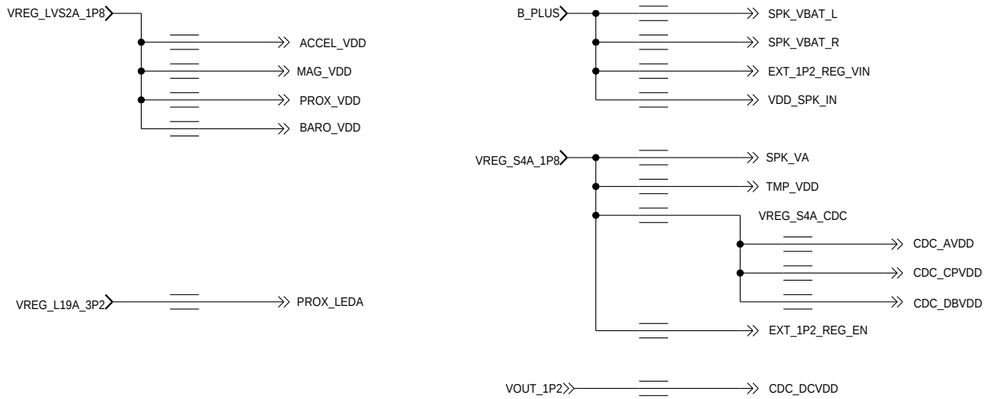

APPROVALS	MOTOROLA MOBILE DEVICES
ENGINEER: MOTOROLA	BLOCK TITLE: xmcs
LAST MODIFIED BY: MOTOROLA Fri Mar 31 09:12:50 2017	
MOTOROLA CONFIDENTIAL RESTRICTED	B | PROJECT NAME 84016657001_a.cpm | REV 03
CAD FILE NAME:	PAGE 32 OF 91

THE DRAWING ON THIS PRINT AND INFORMATION THEREWITH ARE PROPRIETARY TO MOTOROLA AND SHALL NOT BE USED OR DISCUSSED IN WHOLE OR IN PART WITHOUT MOTOROLA'S CONSENT.
© COPYRIGHT, MOTOROLA. THIS DOES NOT IMPLY PUBLICATION

XMCS: PORTS

REF 6000-6999

INTERFACES

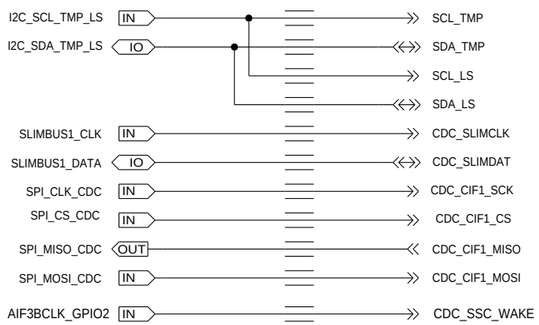

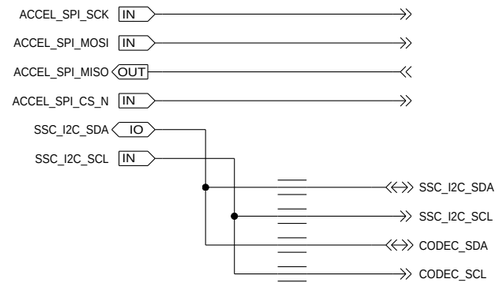

INPUTS

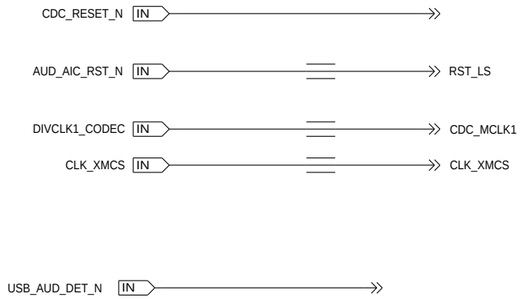

OUTPUTS

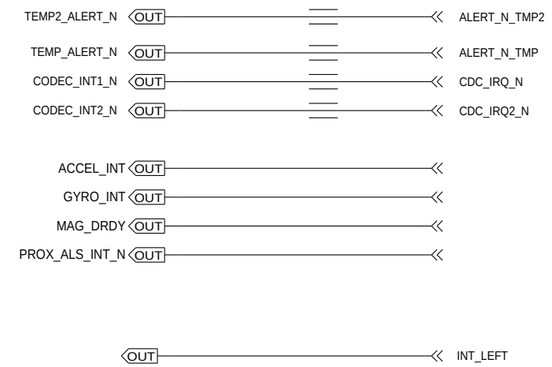

SPEAKER PATHS

MICROPHONES

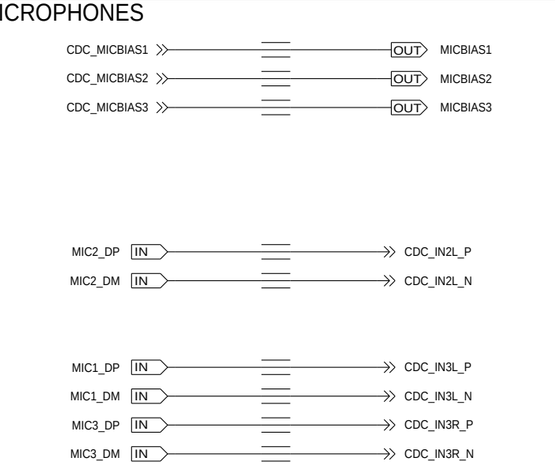

APPROVALS	MOTOROLA MOBILE DEVICES
ENGINEER: MOTOROLA	BLOCK TITLE: xmcs
LAST MODIFIED BY: MOTOROLA Mon Oct 31 11:38:01 2016	

MOTOROLA CONFIDENTIAL RESTRICTED

THE DRAWING ON THIS PRINT AND INFORMATION THEREWITH ARE PROPRIETARY TO MOTOROLA AND SHALL NOT BE USED OR DISCUSSED IN WHOLE OR IN PART WITHOUT MOTOROLA'S CONSENT.
© COPYRIGHT, MOTOROLA. THIS DOES NOT IMPLY PUBLICATION

B	PROJECT NAME 84016657001_a.cpm	REV 03
CAD FILE NAME:		PAGE 33 OF 91

XMCS: SENSORS

REF: 6100-6199

ACCELEROMETER/GYROSCOPE

REF:6110-6119

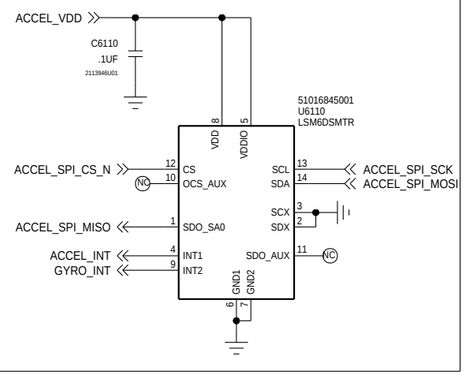

MAGNETOMETER

REF:6130-6139

I2C ADDR:0X0C DNP1ST MAG

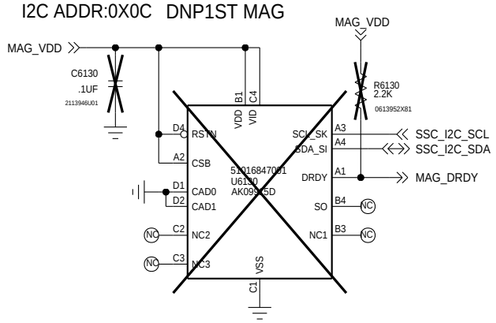

PLACE 2ND MAG

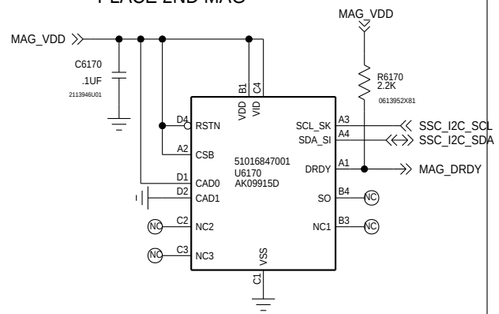

PROXIMITY/AMBIENT LIGHT/SOL FLEX INTERFACE

REF:6120-6129

I2C ADDR:0X39 PACK_IGNORE

PARTS MOVED TO FLEX BRD

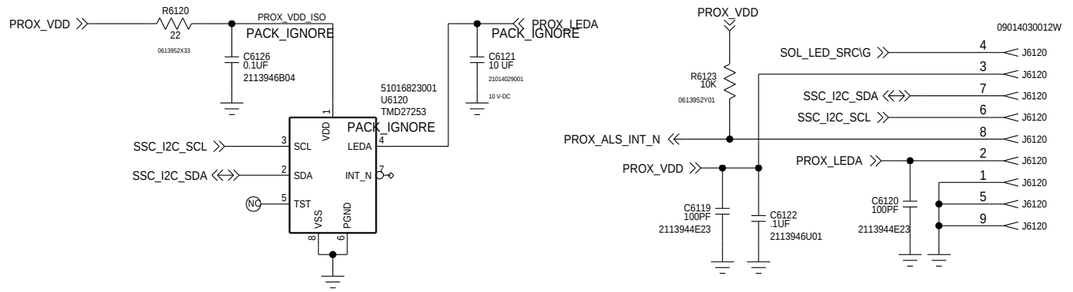

BAROMETER

REF:6140-6149

I2C ADDR:0X77

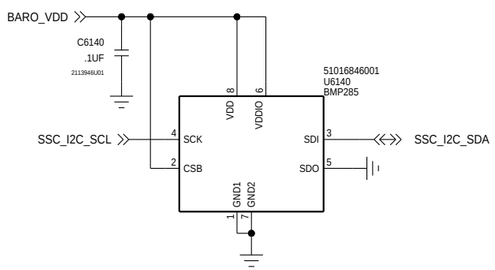

HALL EFFECT

REF:6150-6159

DELETED

BOARD TEMP

REF:6160-6169

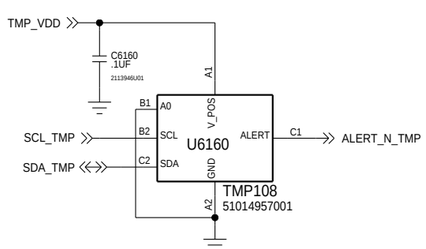

BASE I2C ADDR: 0X48, WRITE 0X90, READ 0X91

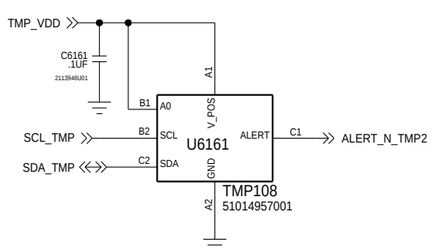

BASE I2C ADDR: 0X49

APPROVALS	MOTOROLA MOBILE DEVICES
ENGINEER: MOTOROLA	BLOCK TITLE: xmcs
LAST MODIFIED BY: MOTOROLA Fri Mar 31 09:15:57 2017	
MOTOROLA CONFIDENTIAL RESTRICTED	B / PROJECT NAME: 84016657001_a.cpm / REV: 03
CAD FILE NAME:	PAGE 34 OF 91

THE DRAWING ON THIS PRINT AND INFORMATION THEREWITH ARE PROPRIETARY TO MOTOROLA AND SHALL NOT BE USED OR DISCUSSED IN WHOLE OR IN PART WITHOUT MOTOROLA'S CONSENT.
© COPYRIGHT, MOTOROLA. THIS DOES NOT IMPLY PUBLICATION

XMCS: CIRRUS CODEC

REF 6250-6299

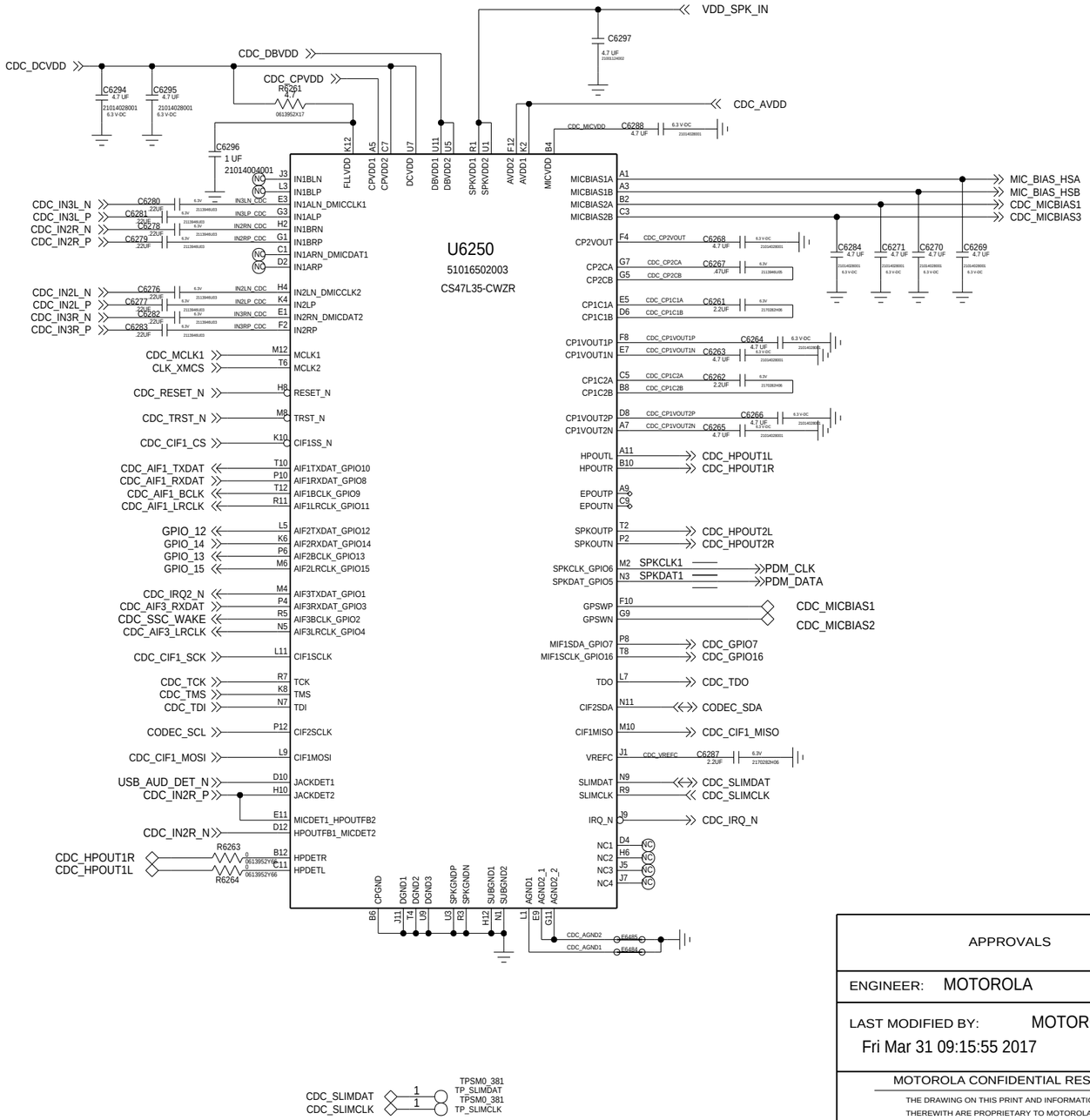

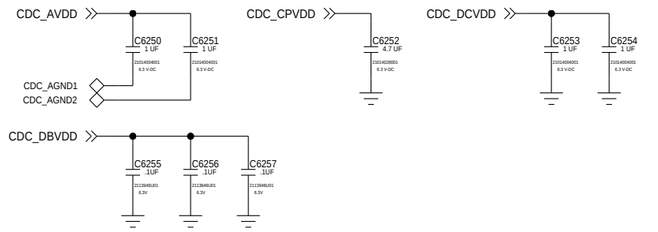

1.2V POWER SUPPLY

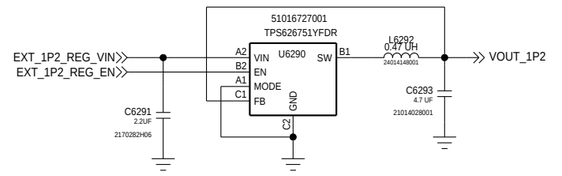

HEADSET DETECTION CIRCUIT

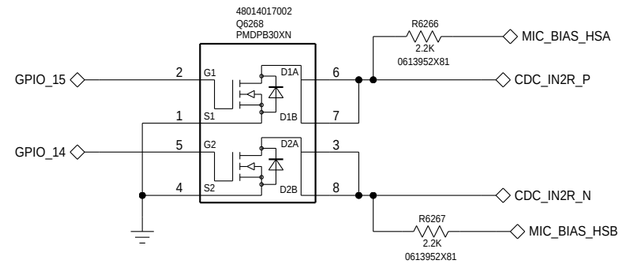

APPROVALS	MOTOROLA MOBILE DEVICES
ENGINEER: MOTOROLA	BLOCK TITLE: xmcs
LAST MODIFIED BY: MOTOROLA Fri Mar 31 09:15:55 2017	
MOTOROLA CONFIDENTIAL RESTRICTED THE DRAWING ON THIS PRINT AND INFORMATION THEREWITH ARE PROPRIETARY TO MOTOROLA AND SHALL NOT BE USED OR DISCUSSED IN WHOLE OR IN PART WITHOUT MOTOROLA'S CONSENT. © COPYRIGHT, MOTOROLA. THIS DOES NOT IMPLY PUBLICATION	B / PROJECT NAME: 84016657001_a.cpm / REV: 03 CAD FILE NAME: / PAGE 35 OF 91

XMCS: LOUD SPEAKER

REF 6400-6499

LEFT SPEAKER AMP

BASE I2C ADDR: 0X40, WRITE 0X80, READ 0X81

LEFT SPKR ON I2C 0X41; NO RIGHT SPKR

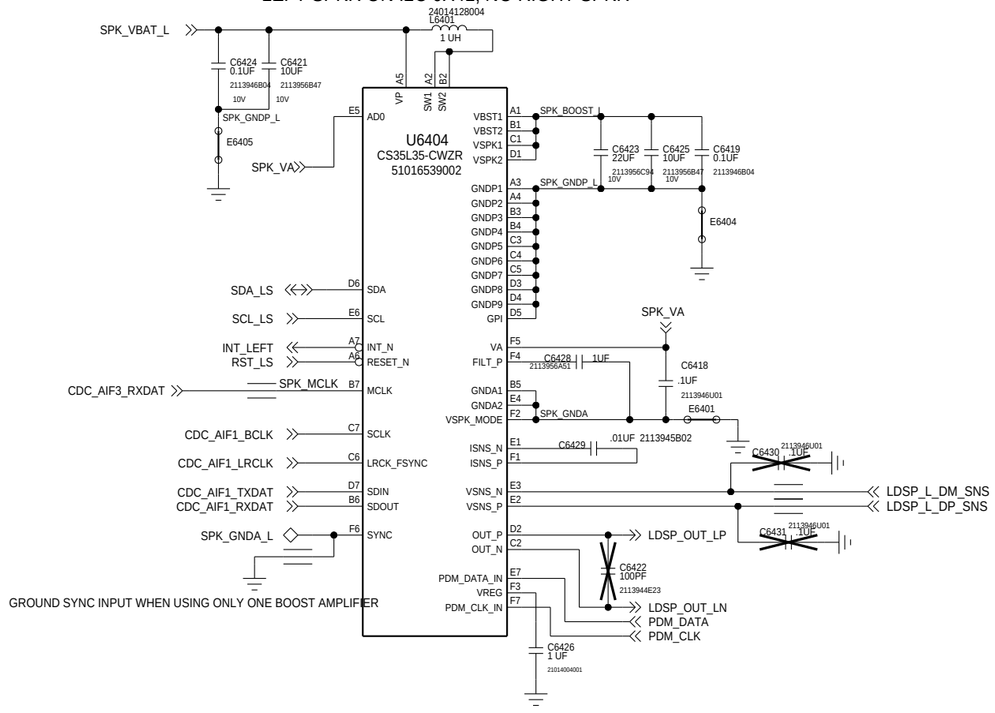

APPROVALS	MOTOROLA MOBILE DEVICES
ENGINEER: MOTOROLA	BLOCK TITLE: xmcs
LAST MODIFIED BY: MOTOROLA Fri Mar 31 09:15:54 2017	

MOTOROLA CONFIDENTIAL RESTRICTED

THE DRAWING ON THIS PRINT AND INFORMATION THEREWITH ARE PROPRIETARY TO MOTOROLA AND SHALL NOT BE USED OR DISCUSSED IN WHOLE OR IN PART WITHOUT MOTOROLA'S CONSENT.

© COPYRIGHT, MOTOROLA. THIS DOES NOT IMPLY PUBLICATION

	PROJECT NAME	REV
B	84016657001_a.cpm	03
CAD FILE NAME:		PAGE 36 OF 91

MSM8998: POWER

REFDES: 1200-1299

SUPPLIES

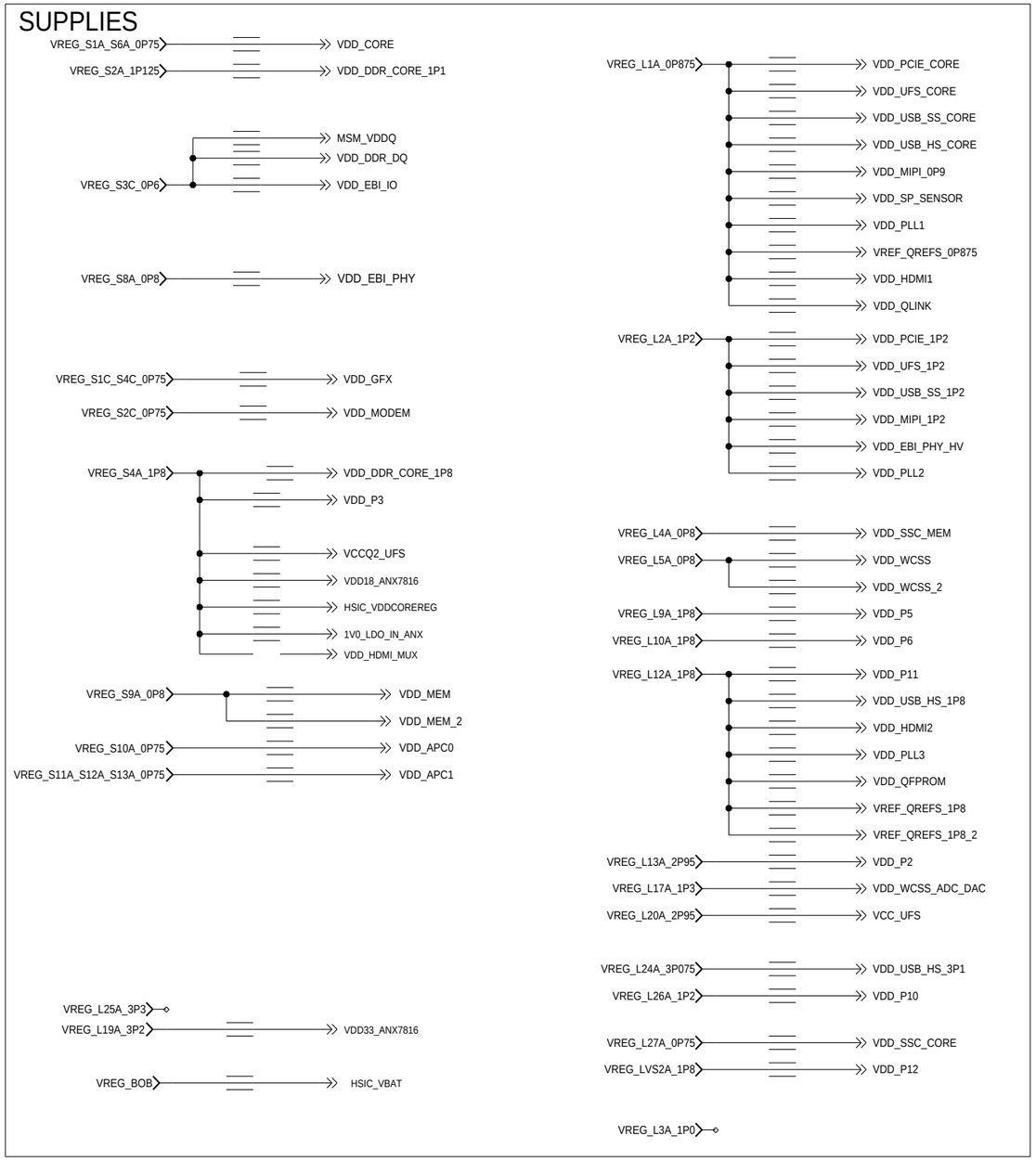

APPROVALS	MOTOROLA MOBILE DEVICES
ENGINEER: MOTOROLA	BLOCK TITLE: ap_pmic
LAST MODIFIED BY: MOTOROLA Fri Mar 31 09:12:26 2017	
MOTOROLA CONFIDENTIAL RESTRICTED	B PROJECT NAME 84016657001_a.cpm REV 03
THE DRAWING ON THIS PRINT AND INFORMATION THEREWITH ARE PROPRIETARY TO MOTOROLA AND SHALL NOT BE USED OR DISCUSSED IN WHOLE OR IN PART WITHOUT MOTOROLA'S CONSENT. © COPYRIGHT, MOTOROLA. THIS DOES NOT IMPLY PUBLICATION	CAD FILE NAME: PAGE 37 OF 91

MSM8998: CTRL/USB/GPIO

REFDES: 1000-1099

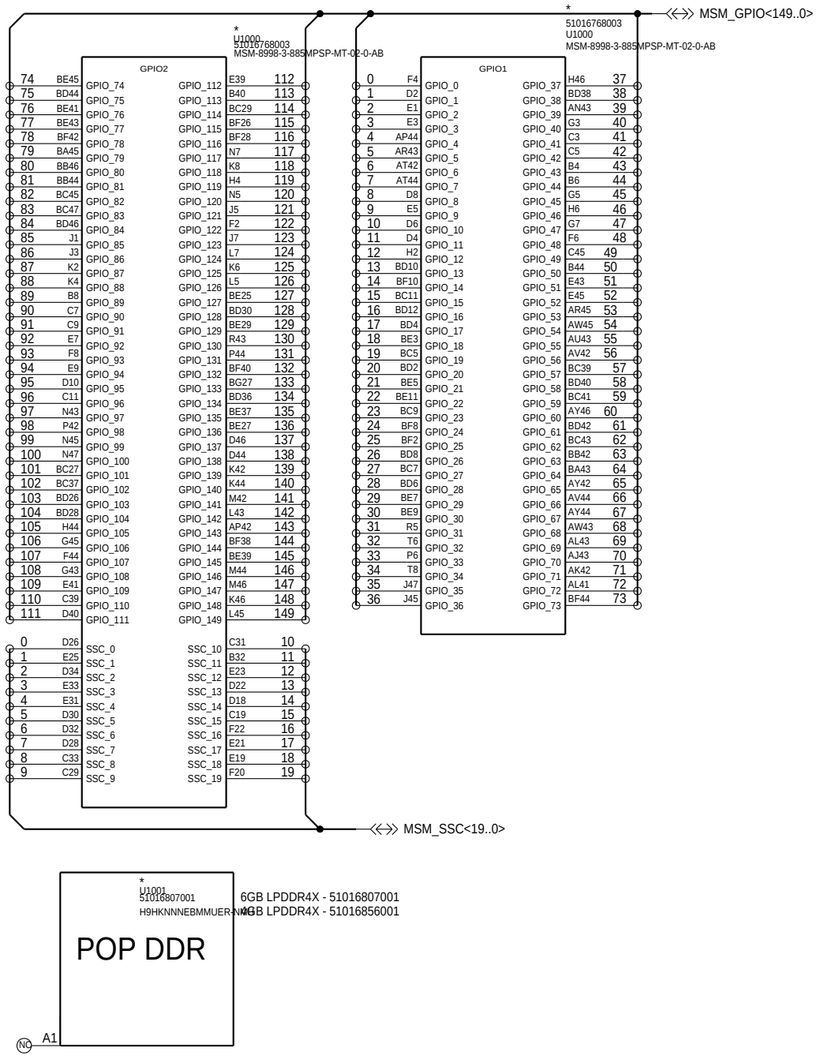

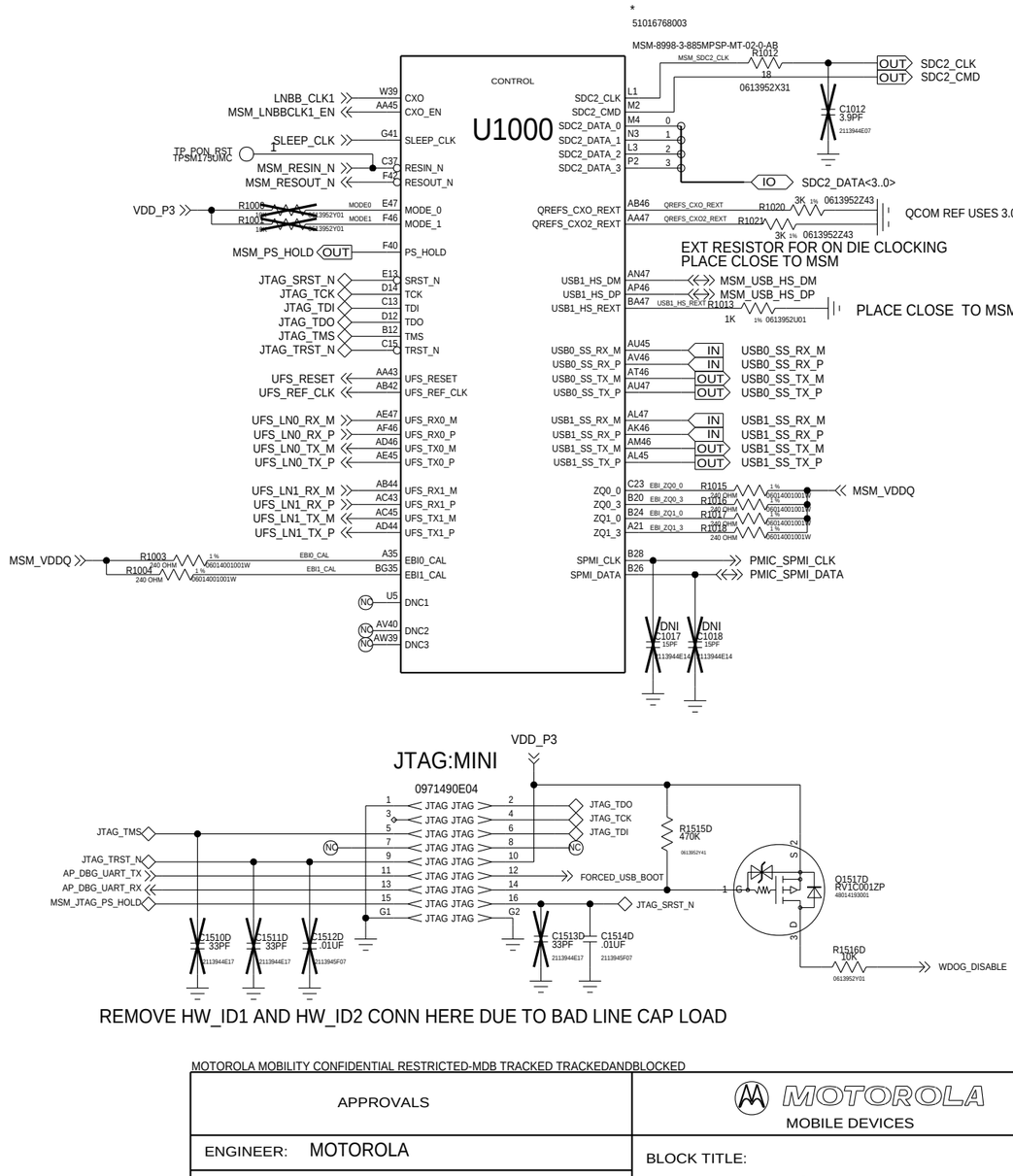

REMOVE HW_ID1 AND HW_ID2 CONN HERE DUE TO BAD LINE CAP LOAD

MOTOROLA MOBILITY CONFIDENTIAL RESTRICTED-MDB TRACKED TRACKEDANDBLOCKED

APPROVALS	MOTOROLA MOBILE DEVICES
ENGINEER: MOTOROLA	BLOCK TITLE: ap_pmic
LAST MODIFIED BY: MOTOROLA Fri Mar 31 09:15:59 2017	
MOTOROLA CONFIDENTIAL RESTRICTED	B | PROJECT NAME 84016657001_a.cpm | REV 03
CAD FILE NAME:	PAGE 38 OF 91

THE DRAWING ON THIS PRINT AND INFORMATION THEREWITH ARE PROPRIETARY TO MOTOROLA AND SHALL NOT BE USED OR DISCUSSED IN WHOLE OR IN PART WITHOUT MOTOROLA'S CONSENT.
© COPYRIGHT, MOTOROLA. THIS DOES NOT IMPLY PUBLICATION

MSM8998: MIPI/HDMI/PCIE

REFDES: 1030-1039

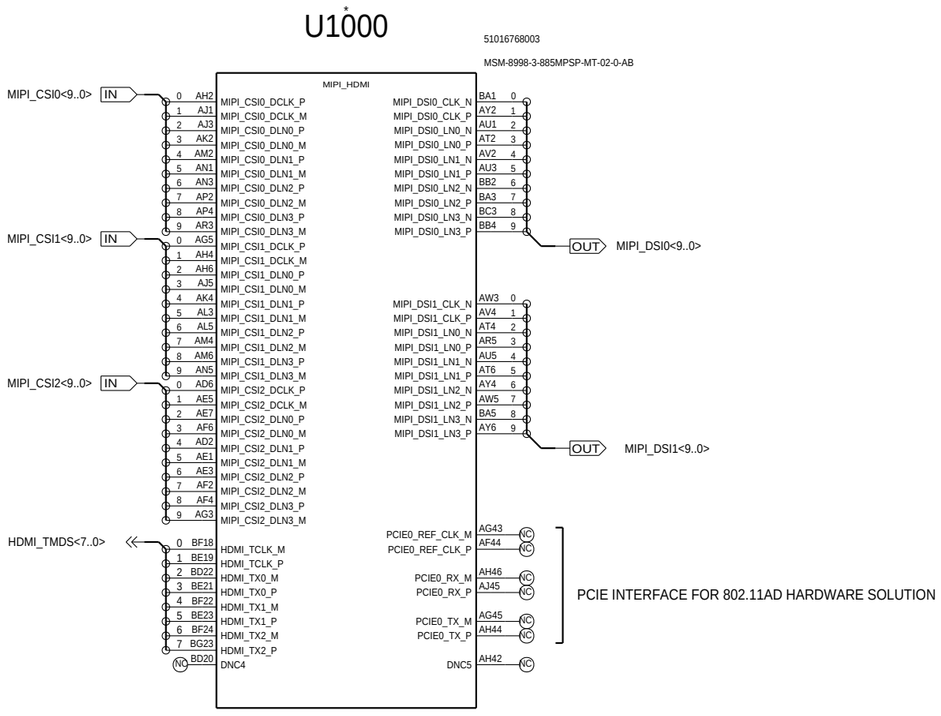

MOTOROLA MOBILITY CONFIDENTIAL RESTRICTED-MDB TRACKED TRACKEDANDBLOCKED

APPROVALS	MOTOROLA MOBILE DEVICES
ENGINEER: MOTOROLA	BLOCK TITLE: ap_pmic
LAST MODIFIED BY: MOTOROLA Fri Mar 31 09:16:14 2017	

MOTOROLA CONFIDENTIAL RESTRICTED

THE DRAWING ON THIS PRINT AND INFORMATION THEREWITH ARE PROPRIETARY TO MOTOROLA AND SHALL NOT BE USED OR DISCUSSED IN WHOLE OR IN PART WITHOUT MOTOROLA'S CONSENT.
© COPYRIGHT, MOTOROLA. THIS DOES NOT IMPLY PUBLICATION

	PROJECT NAME	REV
B	84016657001_a.cpm	03
CAD FILE NAME:		PAGE 39 OF 91

MSM8998: RF INTERFACE

REFDES: 1040-1049

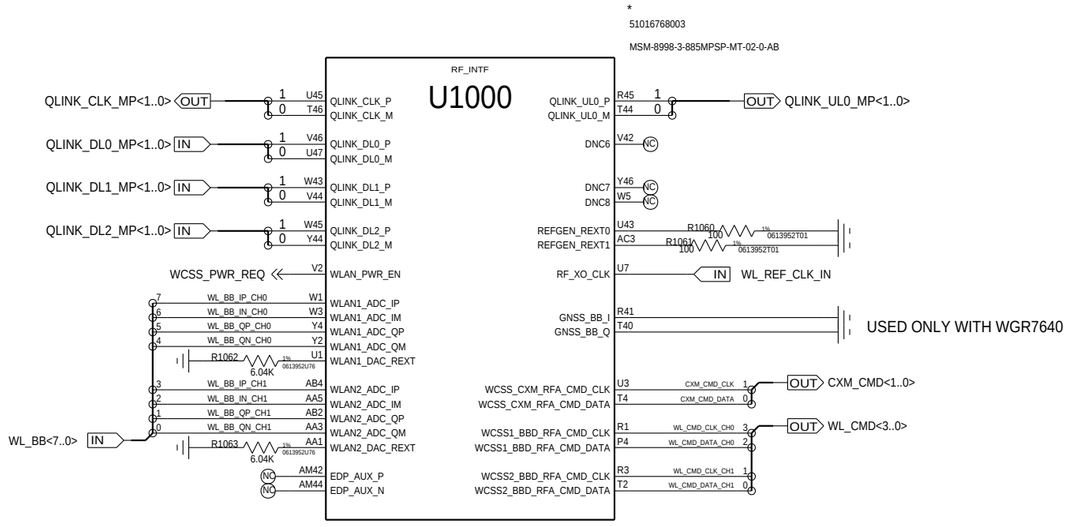

MOTOROLA MOBILITY CONFIDENTIAL RESTRICTED-MDB TRACKED TRACKEDANDBLOCKED

APPROVALS	MOTOROLA MOBILE DEVICES
ENGINEER: MOTOROLA	BLOCK TITLE: ap_pmic
LAST MODIFIED BY: MOTOROLA Fri Mar 31 09:16:04 2017	
MOTOROLA CONFIDENTIAL RESTRICTED	B | PROJECT NAME: 84016657001_a.cpm | REV: 03
CAD FILE NAME:	PAGE 40 OF 91

THE DRAWING ON THIS PRINT AND INFORMATION THEREWITH ARE PROPRIETARY TO MOTOROLA AND SHALL NOT BE USED OR DISCUSSED IN WHOLE OR IN PART WITHOUT MOTOROLA'S CONSENT.
© COPYRIGHT, MOTOROLA. THIS DOES NOT IMPLY PUBLICATION

MSM8998: HSIC

REFDES: 1250-1279

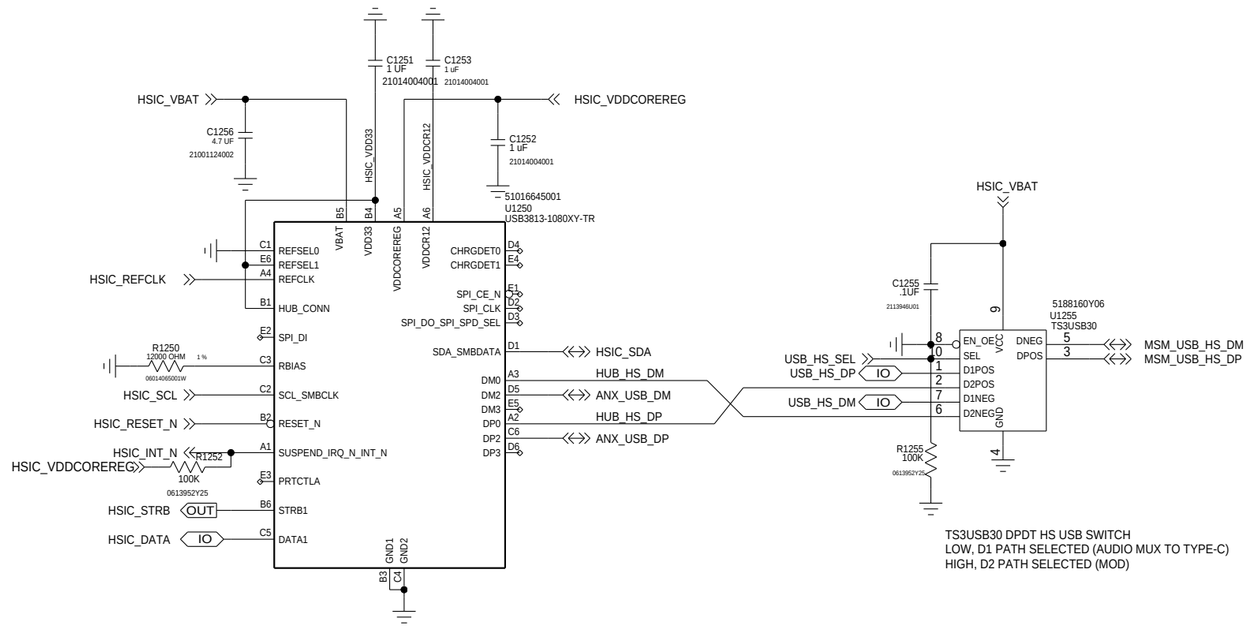

7-BIT I2C ADDR: 0X2D

APPROVALS	MOTOROLA MOBILE DEVICES
ENGINEER: MOTOROLA	BLOCK TITLE: ap_pmic
LAST MODIFIED BY: MOTOROLA Fri Mar 31 09:16:03 2017	
MOTOROLA CONFIDENTIAL RESTRICTED	B | PROJECT NAME: 84016657001_a.cpm | REV: 03
CAD FILE NAME:	PAGE 41 OF 91

THE DRAWING ON THIS PRINT AND INFORMATION THEREWITH ARE PROPRIETARY TO MOTOROLA AND SHALL NOT BE USED OR DISCUSSED IN WHOLE OR IN PART WITHOUT MOTOROLA'S CONSENT.
© COPYRIGHT, MOTOROLA. THIS DOES NOT IMPLY PUBLICATION

MSM8998: HDMI->MYDP TO MODS

REFDES: 1200-1219

ANX7816 I2C MAP

7-BIT BASE	WRITE	READ
0X38	0X70	0X71
0X39	0X72	0X73
0X3D	0X7A	0X7B
0X3F	0X7E	0X7F
0X40	0X80	0X81

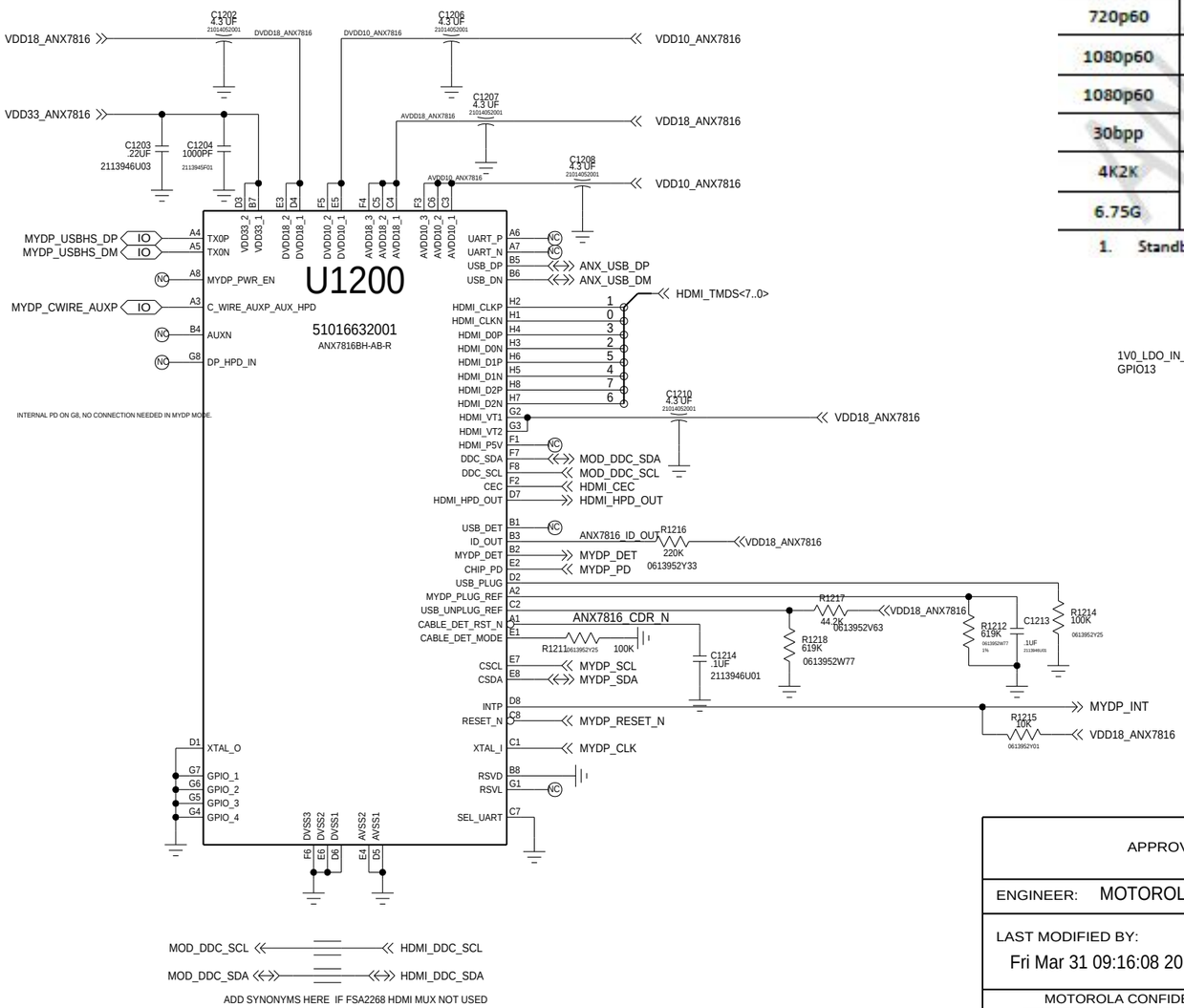

Resolution	Pixel Clock Freq. (MHz)	Power Consumption					
		Typical Values					
		AVDD33_IN (mAmps)	AVDD18 (mAmps)	DVDD18 (mAmps)	AVDD10 (mAmps)	DVDD10 (mAmps)	Power (mWatts)
Standby	N/A	10.63[1]	0.9[1]	0.3[1]	0	0	42[1]
480p60	27	2.5	40	0	25	15	125
720p60	74.25	2.5	45	0	30	20	145
1080p60	148.5	2.5	50	0	35	30	165
1080p60 30bpp	185.6	2.5	50	0	40	35	175
4K2K 6.75G	297	2.5	55	0	45	40	200

1. Standby power consumption values are µAmps (µA) and µWatts (µW).

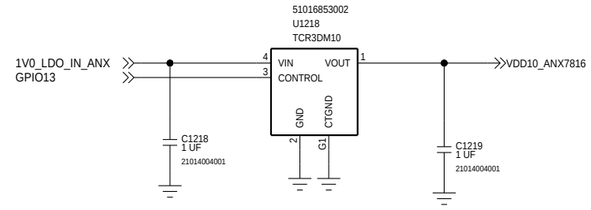

ANALOG CZ

APPROVALS	MOTOROLA MOBILE DEVICES
ENGINEER: MOTOROLA	BLOCK TITLE: ap_pmic
LAST MODIFIED BY: MOTOROLA Fri Mar 31 09:16:08 2017	
MOTOROLA CONFIDENTIAL RESTRICTED	B / PROJECT NAME: 84016657001_a.cpm / REV: 03
CAD FILE NAME:	PAGE 42 OF 91

THE DRAWING ON THIS PRINT AND INFORMATION THEREWITH ARE PROPRIETARY TO MOTOROLA AND SHALL NOT BE USED OR DISCUSSED IN WHOLE OR IN PART WITHOUT MOTOROLA'S CONSENT.
© COPYRIGHT, MOTOROLA. THIS DOES NOT IMPLY PUBLICATION

MSM8998: POWER 1

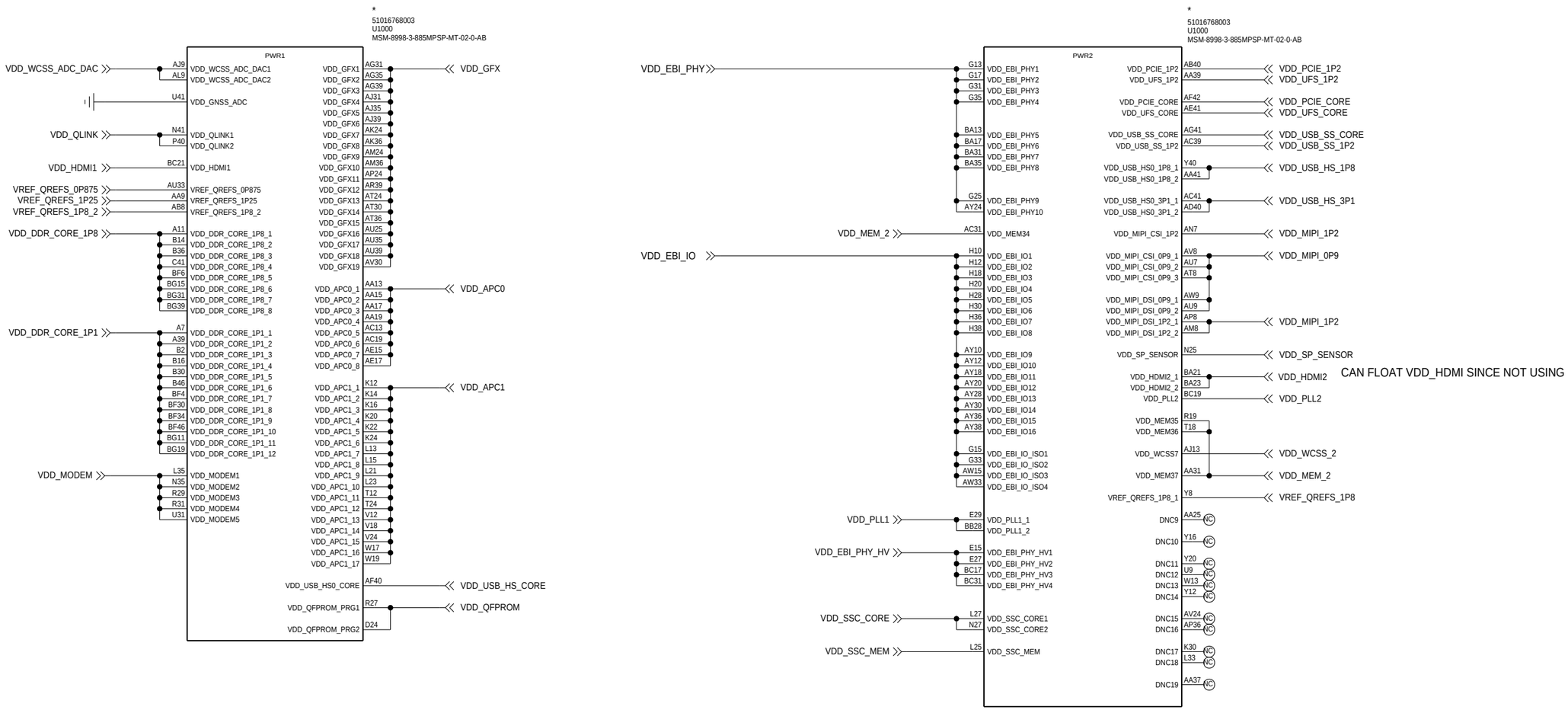

MOTOROLA MOBILITY CONFIDENTIAL RESTRICTED-MDB TRACKED TRACKEDANDBLOCKED

APPROVALS	MOTOROLA MOBILE DEVICES
ENGINEER: MOTOROLA	BLOCK TITLE: ap_pmic
LAST MODIFIED BY: MOTOROLA Fri Mar 31 09:16:15 2017	
MOTOROLA CONFIDENTIAL RESTRICTED	PROJECT NAME: B 84016657001_a.cpm; REV: 03
CAD FILE NAME:	PAGE 43 OF 91

THE DRAWING ON THIS PRINT AND INFORMATION THEREWITH ARE PROPRIETARY TO MOTOROLA AND SHALL NOT BE USED OR DISCUSSED IN WHOLE OR IN PART WITHOUT MOTOROLA'S CONSENT.
© COPYRIGHT, MOTOROLA. THIS DOES NOT IMPLY PUBLICATION

MSM8998: POWER 2

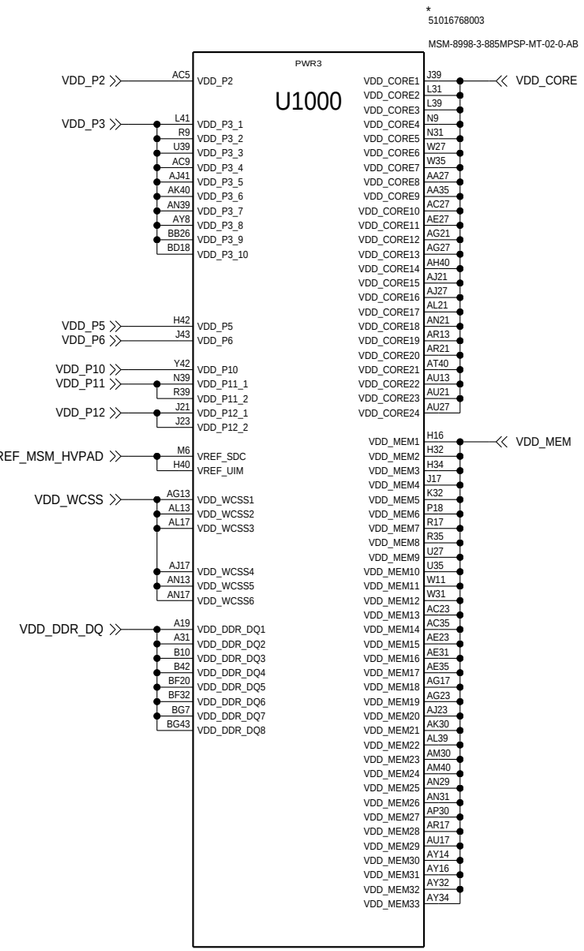

MOTOROLA MOBILITY CONFIDENTIAL RESTRICTED-MDB TRACKED TRACKEDANDBLOCKED

APPROVALS	MOTOROLA MOBILE DEVICES
ENGINEER: MOTOROLA	BLOCK TITLE: ap_pmic
LAST MODIFIED BY: MOTOROLA Fri Mar 31 09:16:16 2017	
MOTOROLA CONFIDENTIAL RESTRICTED THE DRAWING ON THIS PRINT AND INFORMATION THEREWITH ARE PROPRIETARY TO MOTOROLA AND SHALL NOT BE USED OR DISCUSSED IN WHOLE OR IN PART WITHOUT MOTOROLA'S CONSENT. © COPYRIGHT, MOTOROLA. THIS DOES NOT IMPLY PUBLICATION	B PROJECT NAME: 84016657001_a.cpm — REV: 03
CAD FILE NAME:	PAGE 44 OF 91

MSM8998: BYPASS CAPS COSTCUT

REFDES: 1300-1599

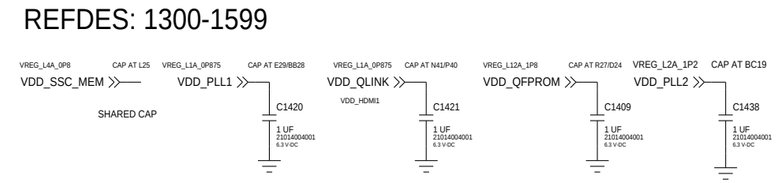

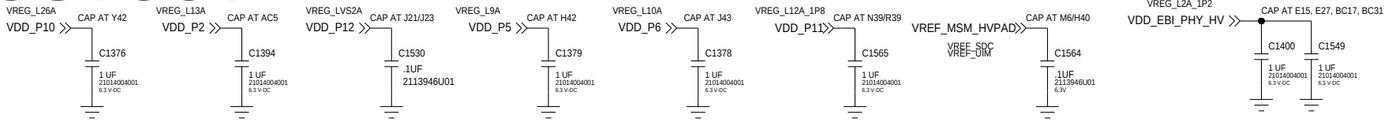

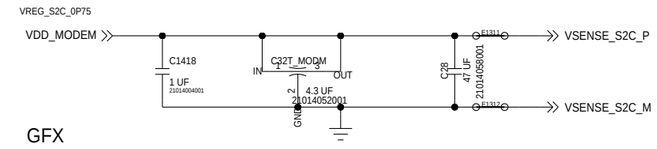

GFX

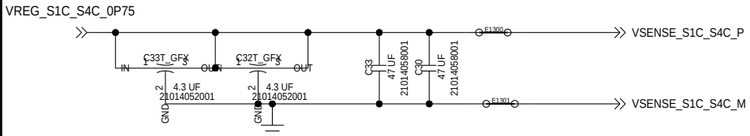

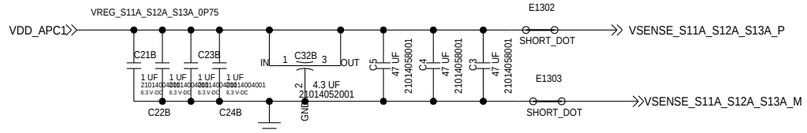

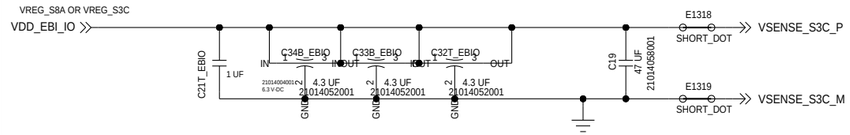

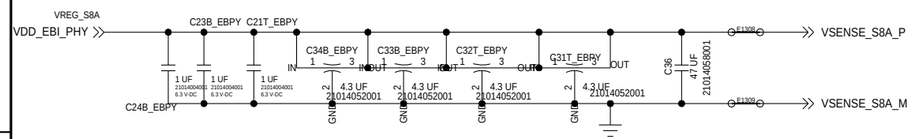

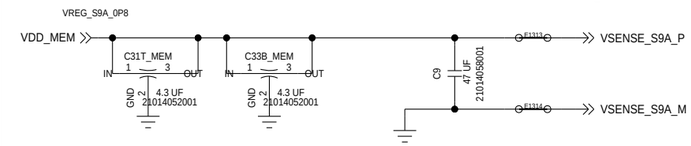

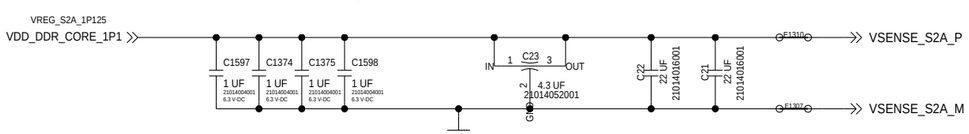

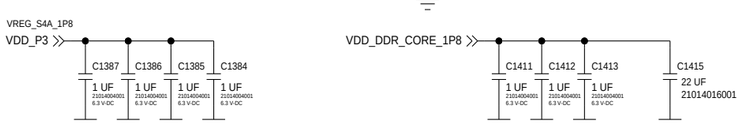

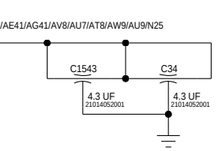

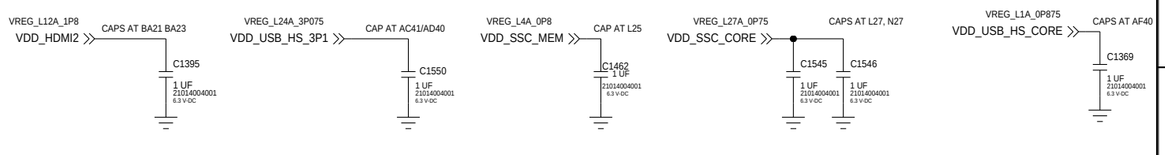

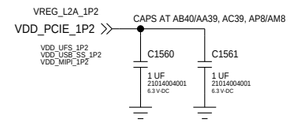

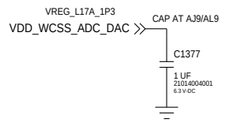

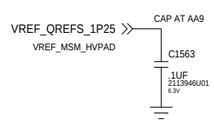

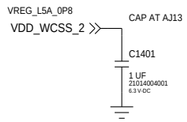

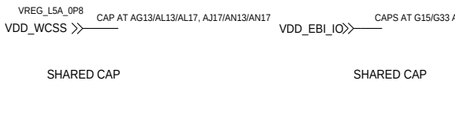

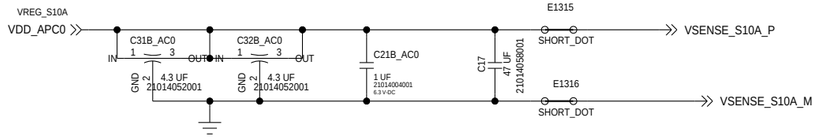

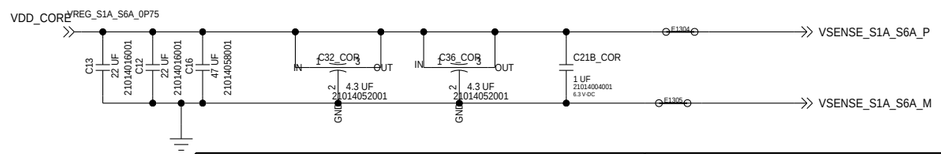

APPROVALS	MOTOROLA MOBILE DEVICES
ENGINEER: MOTOROLA	BLOCK TITLE: ap_pmic
LAST MODIFIED BY: MOTOROLA Fri Mar 31 09:16:19 2017	
MOTOROLA CONFIDENTIAL RESTRICTED THE DRAWING ON THIS PRINT AND INFORMATION THEREWITH ARE PROPRIETARY TO MOTOROLA AND SHALL NOT BE USED OR DISCUSSED IN WHOLE OR IN PART WITHOUT MOTOROLA'S CONSENT. © COPYRIGHT, MOTOROLA. THIS DOES NOT IMPLY PUBLICATION	B / PROJECT NAME 84016657001_a.cpm / REV 03 CAD FILE NAME: / PAGE 45 OF 91

MSM8998: GND/NC

*
51016768003
U1000
MSM-8998-3-885MSPSP-MT-02-0-AB

GND1

A1	GND1	GND51	H8
A3	GND2	GND52	H14
A5	GND3	GND53	H22
A9	GND4	GND54	H24
A13	GND5	GND55	H26
A15	GND6	GND56	J9
A17	GND7	GND57	J11
A23	GND8	GND58	J13
A25	GND9	GND59	J15
A27	GND10	GND60	J19
A29	GND11	GND61	J25
A33	GND12	GND62	J27
A37	GND13	GND63	J29
A41	GND14	GND64	J31
A43	GND15	GND65	J33
A45	GND16	GND66	J35
A47	GND17	GND67	J37
B18	GND18	GND68	J41
B22	GND19	GND69	K40
B34	GND20	GND70	L9
B38	GND21	GND71	L11
C1	GND22	GND72	L17
C17	GND23	GND73	L19
C21	GND24	GND74	L29
C25	GND25	GND75	L37
C27	GND26	GND76	L47
C35	GND27	GND77	M8
C47	GND28	GND78	M12
D16	GND29	GND79	M18
D20	GND30	GND80	M24
D36	GND31	GND81	M40
D38	GND32	GND82	N1
D42	GND33	GND83	N11
E11	GND34	GND84	N29
E17	GND35	GND85	N33
E35	GND36	GND86	N37
E37	GND37	GND87	P8
F10	GND38	GND88	P12
F24	GND39	GND89	P24
F38	GND40	GND90	R7
G1	GND41	GND91	R11
G9	GND42	GND92	R25
G11	GND43	GND93	R33
G19	GND44	GND94	R37
G21	GND45	GND95	R47
G27	GND46	GND96	U11
G29	GND47	GND97	U25
G37	GND48	GND98	U29
G39	GND49	GND99	U33
G47	GND50	GND100	U37

*
51016768003
U1000
MSM-8998-3-885MSPSP-MT-02-0-AB

GND2

V8	GND101	GND151	AG37
V40	GND102	GND152	AG47
W7	GND103	GND153	AH8
W9	GND104	GND154	AJ7
W15	GND105	GND155	AJ15
W23	GND106	GND156	AJ19
W25	GND107	GND157	AJ25
W29	GND108	GND158	AJ29
W33	GND109	GND159	AJ33
W37	GND110	GND160	AJ37
W47	GND111	GND161	AJ47
AA7	GND112	GND162	AK6
AA11	GND113	GND163	AK8
AA21	GND114	GND164	AK44
AA23	GND115	GND165	AL1
AA33	GND116	GND166	AL7
AC1	GND117	GND167	AL11
AC7	GND118	GND168	AL15
AC11	GND119	GND169	AL19
AC15	GND120	GND170	AL23
AC17	GND121	GND171	AL37
AC21	GND122	GND172	AN9
AC25	GND123	GND173	AN11
AC33	GND124	GND174	AN15
AC37	GND125	GND175	AN19
AC47	GND126	GND176	AN23
AD4	GND127	GND177	AN37
AD8	GND128	GND178	AN41
AD42	GND129	GND179	AN45
AE9	GND130	GND180	AP6
AE11	GND131	GND181	AP40
AE13	GND132	GND182	AR1
AE19	GND133	GND183	AR7
AE21	GND134	GND184	AR9
AE25	GND135	GND185	AR11
AE29	GND136	GND186	AR15
AE33	GND137	GND187	AR19
AE37	GND138	GND188	AR23
AE39	GND139	GND189	AR37
AE43	GND140	GND190	AR41
AF8	GND141	GND191	AR47
AG1	GND142	GND192	AU11
AG7	GND143	GND193	AU15
AG9	GND144	GND194	AU19
AG11	GND145	GND195	AU23
AG15	GND146	GND196	AU29
AG19	GND147	GND197	AU31
AG25	GND148	GND198	AU37
AG29	GND149	GND199	AU41
AG33	GND150	GND200	AV6

*
51016768003
U1000
MSM-8998-3-885MSPSP-MT-02-0-AB

GND3

AW1	GND201	GND243	BD16
AW7	GND202	GND244	BD24
AW11	GND203	GND245	BD32
AW13	GND204	GND246	BD34
AW17	GND205	GND247	BE13
AW19	GND206	GND248	BE15
AW21	GND207	GND249	BE17
AW23	GND208	GND250	BE31
AW25	GND209	GND251	BE33
AW27	GND210	GND252	BE35
AW29	GND211	GND253	BE47
AW31	GND212	GND254	BF12
AW35	GND213	GND255	BF14
AW37	GND214	GND256	BF16
AW41	GND215	GND257	BF36
AW47	GND216	GND258	BG1
AY22	GND217	GND259	BG3
AY26	GND218	GND260	BG5
AY40	GND219	GND261	BG9
BA7	GND220	GND262	BG13
BA9	GND221	GND263	BG17
BA11	GND222	GND264	BG21
BA15	GND223	GND265	BG25
BA19	GND224	GND266	BG29
BA27	GND225	GND267	BG33
BA29	GND226	GND268	BG37
BA33	GND227	GND269	BG41
BA37	GND228	GND270	BG45
BA39	GND229	GND271	BG47
BA41	GND230		
BB6	GND231	GND272	V4
BB8	GND232	GND273	V6
BB20	GND233		
BB24	GND234	GND274	Y6
BC1	GND235	GND275	AB6
BE1	GND236		
BC15	GND237	GND276	AA29
BC23	GND238	GND277	AJ11
BC25	GND239	GND278	AC29
BC33	GND240	GND279	W21
BC35	GND241		
BD14	GND242	GND280	T42

*
51016768003
U1000
MSM-8998-3-885MSPSP-MT-02-0-AB

UNASSIGNED

NC C43	NC1	NC15	BA25 NC
NC F12	NC2	NC16	BB10 NC
NC F14	NC3	NC17	BB12 NC
NC F16	NC4	NC18	BB14 NC
NC F18	NC5	NC19	BB16 NC
NC F26	NC6	NC20	BB18 NC
NC F28	NC7	NC21	BB22 NC
NC F30	NC8	NC22	BB30 NC
NC F32	NC9	NC23	BB32 NC
NC F34	NC10	NC24	BB34 NC
NC F36	NC11	NC25	BB36 NC
NC G23	NC12	NC26	BB38 NC
NC P46	NC13	NC28	BB40 NC
NC W41	NC14	NC27	BC13 NC

MOTOROLA MOBILITY CONFIDENTIAL RESTRICTED-MDB TRACKED TRACKEDANDBLOCKED

APPROVALS	MOTOROLA MOBILE DEVICES
ENGINEER: MOTOROLA	BLOCK TITLE: ap_pmic
LAST MODIFIED BY: MOTOROLA Fri Mar 31 09:16:16 2017	
MOTOROLA CONFIDENTIAL RESTRICTED	PROJECT NAME: B 84016657001_a.cpm; REV: 03
CAD FILE NAME:	PAGE 46 OF 91

THE DRAWING ON THIS PRINT AND INFORMATION THEREWITH ARE PROPRIETARY TO MOTOROLA AND SHALL NOT BE USED OR DISCUSSED IN WHOLE OR IN PART WITHOUT MOTOROLA'S CONSENT.
© COPYRIGHT, MOTOROLA. THIS DOES NOT IMPLY PUBLICATION

MSM8998: GPIO MAP

REFDES: 1100-1199

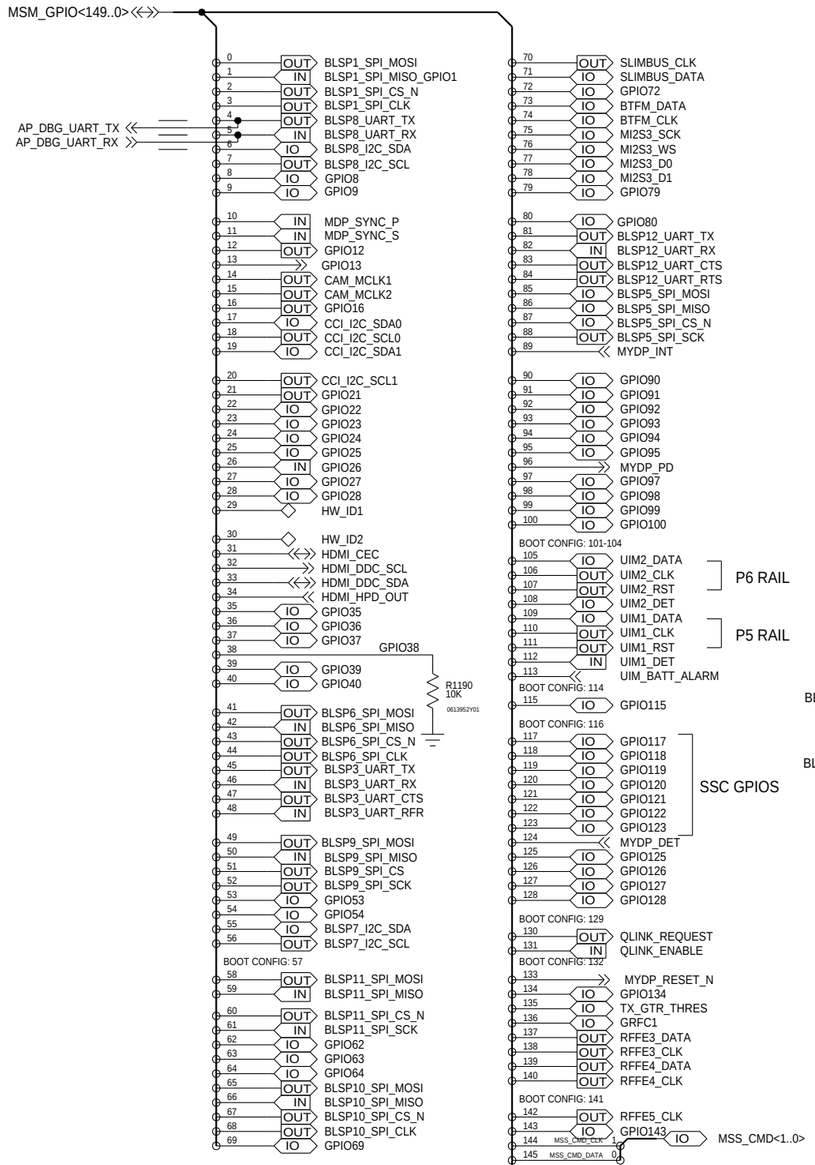

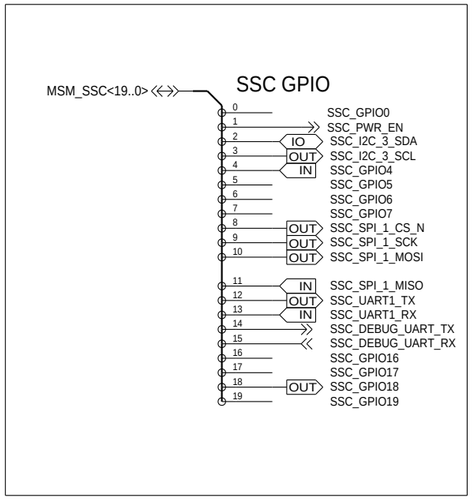

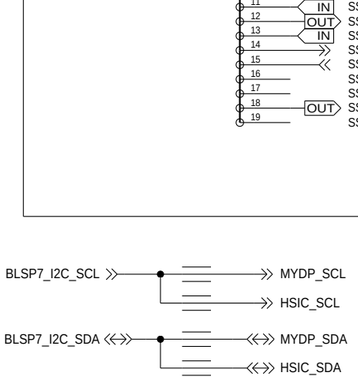

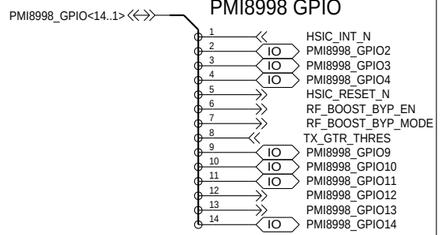

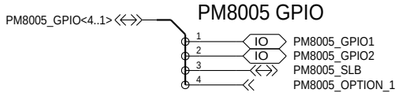

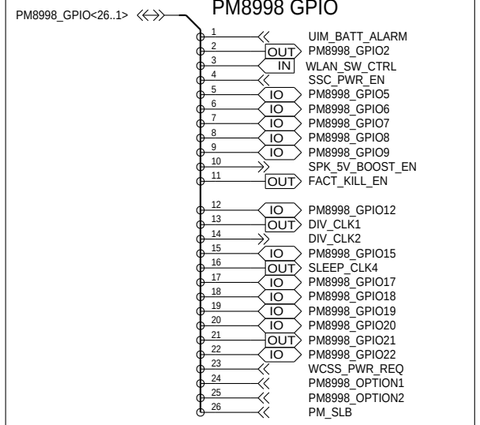

MSM BOOT CONFIGURATION PINS

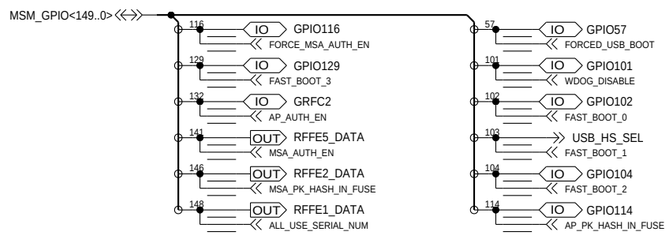

APPROVALS	MOTOROLA MOBILE DEVICES
ENGINEER: MOTOROLA	BLOCK TITLE: ap_pmic
LAST MODIFIED BY: MOTOROLA Fri Mar 31 09:16:21 2017	
MOTOROLA CONFIDENTIAL RESTRICTED	B PROJECT NAME 84016657001_a.cpm REV 03
CAD FILE NAME:	PAGE 47 OF 91

THE DRAWING ON THIS PRINT AND INFORMATION THEREWITH ARE PROPRIETARY TO MOTOROLA AND SHALL NOT BE USED OR DISCUSSED IN WHOLE OR IN PART WITHOUT MOTOROLA'S CONSENT.
© COPYRIGHT, MOTOROLA. THIS DOES NOT IMPLY PUBLICATION

MOTOROLA MOBILITY CONFIDENTIAL RESTRICTED-MDB TRACKED TRACKEDANDBLOCKED

MSM8998: SUPPORT

REFDES: 1100-1199

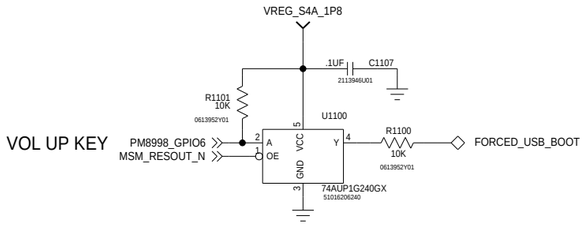

8998 BOOT OPTIONS

FET MOVED TO NSM/HEADER PAGE

NOT NEED FOR PORTABLE

BOOT_CONFIG[4:1]	BOOT OPTION
0000	UFS > SDC2 > USB
0001	SDC2 > UFS
0010	SDC2
0011	USB

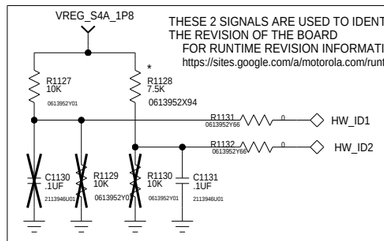

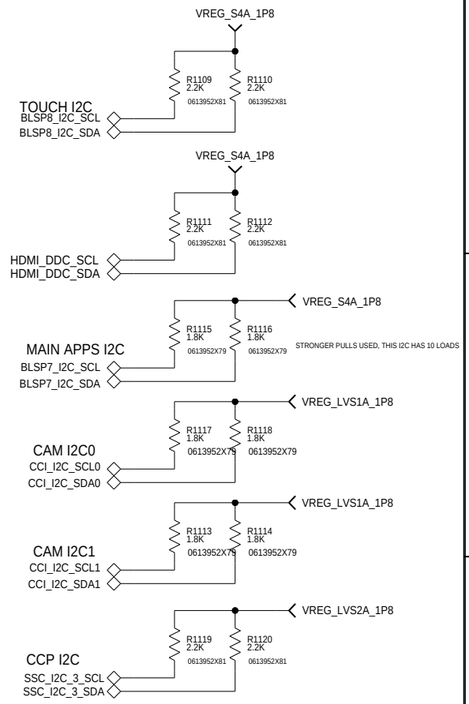

APPROVALS	MOTOROLA MOBILE DEVICES
ENGINEER: MOTOROLA	BLOCK TITLE: ap_pmic
LAST MODIFIED BY: MOTOROLA Fri Mar 31 09:16:03 2017	
MOTOROLA CONFIDENTIAL RESTRICTED	PROJECT NAME: B 84016657001_a.cpm; REV: 03
CAD FILE NAME:	PAGE 48 OF 91

THE DRAWING ON THIS PRINT AND INFORMATION THEREWITH ARE PROPRIETARY TO MOTOROLA AND SHALL NOT BE USED OR DISCUSSED IN WHOLE OR IN PART WITHOUT MOTOROLA'S CONSENT. © COPYRIGHT, MOTOROLA. THIS DOES NOT IMPLY PUBLICATION

MSM8998: UFS

REFDES: 1600-1699

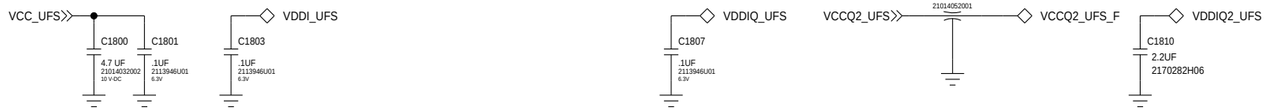

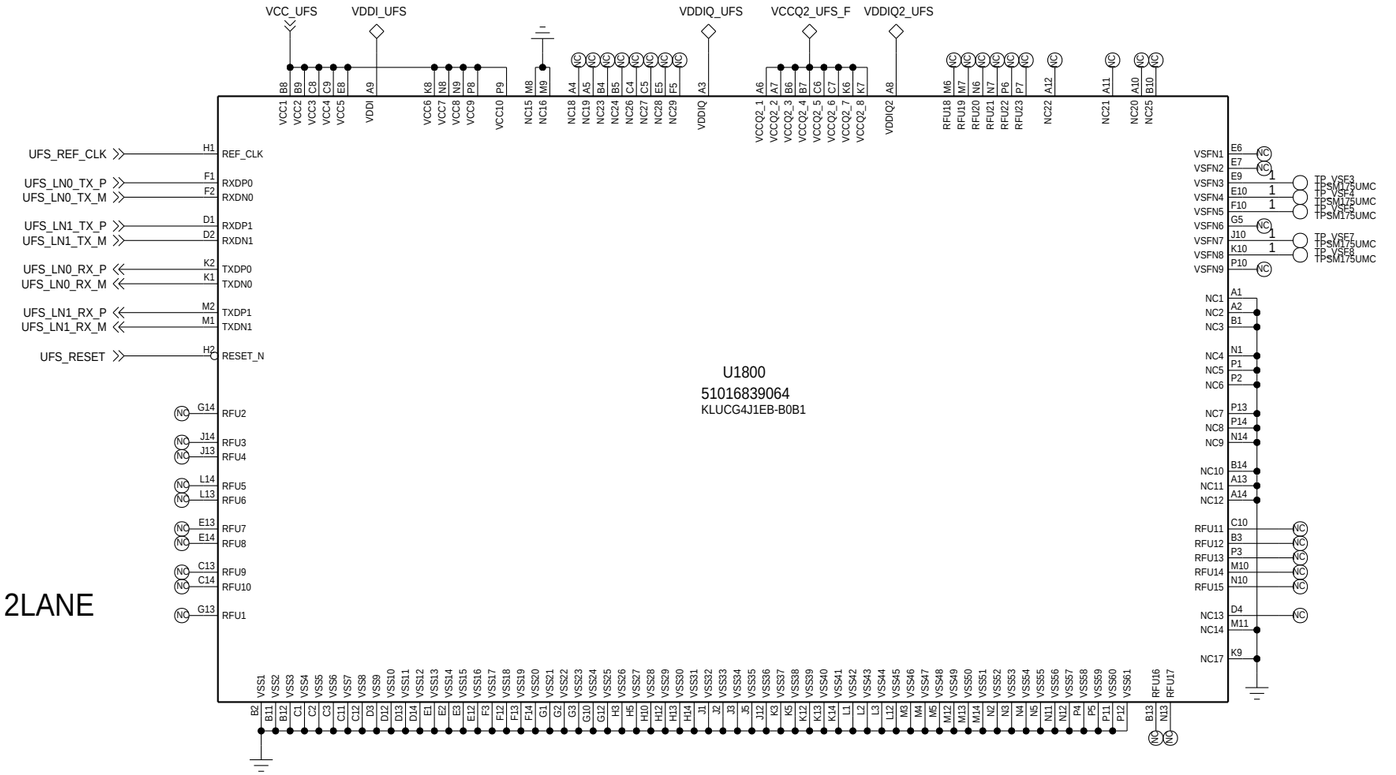

NOTE: MUST USE UFS HS-GEAR3 WITH 2LANE

64GB = 51016839064
128GB =51016839128

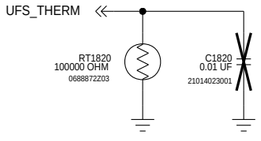

MOTOROLA MOBILITY CONFIDENTIAL RESTRICTED-MDB TRACKED TRACKEDANDBLOCKED

APPROVALS	MOTOROLA MOBILE DEVICES
ENGINEER: MOTOROLA	BLOCK TITLE: ap_pmic
LAST MODIFIED BY: MOTOROLA Fri Mar 31 09:16:09 2017	
MOTOROLA CONFIDENTIAL RESTRICTED	PROJECT NAME: B 84016657001_a.cpm — REV: 03
CAD FILE NAME:	PAGE 49 OF 91

THE DRAWING ON THIS PRINT AND INFORMATION THEREWITH ARE PROPRIETARY TO MOTOROLA AND SHALL NOT BE USED OR DISCUSSED IN WHOLE OR IN PART WITHOUT MOTOROLA'S CONSENT.
© COPYRIGHT, MOTOROLA. THIS DOES NOT IMPLY PUBLICATION

PM8998: POWER

REFDES: 2300-2399

INPUT POWER

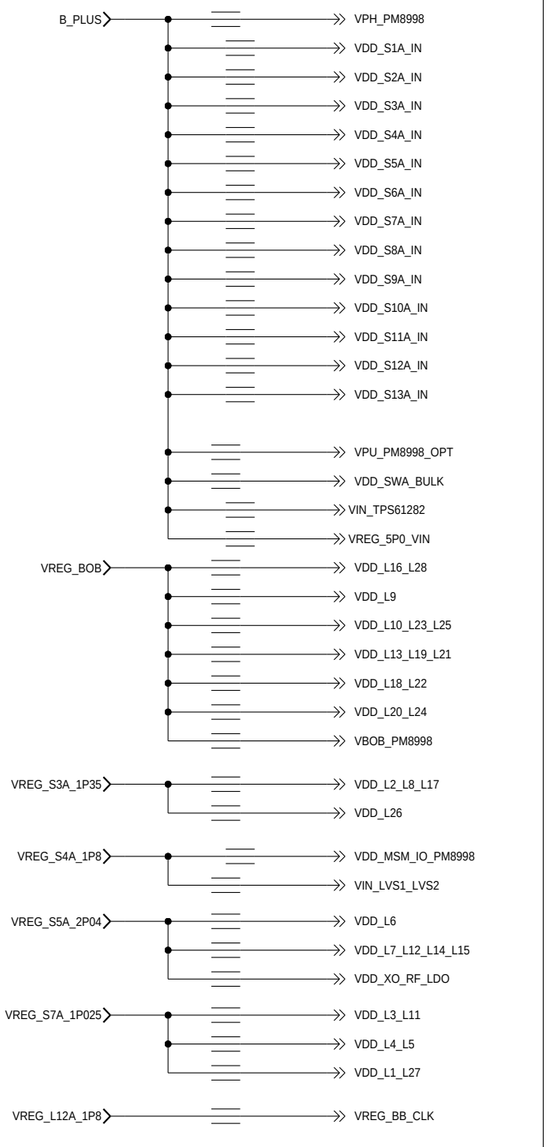

OUTPUT POWER

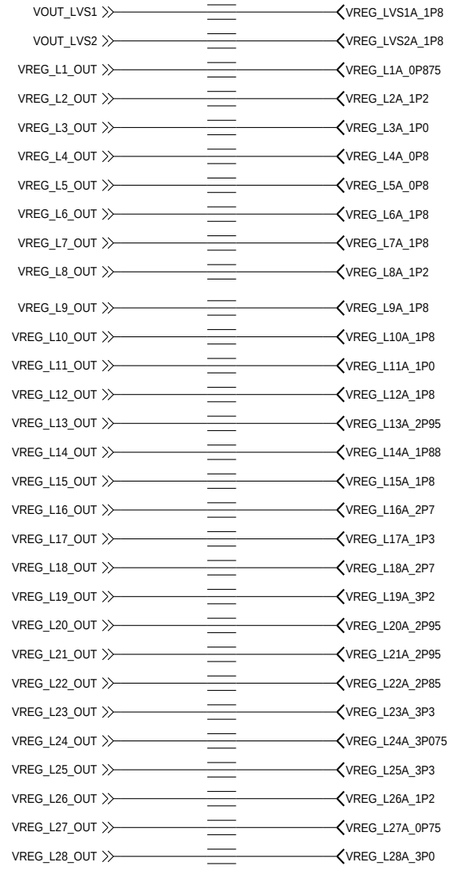

APPROVALS	MOTOROLA MOBILE DEVICES
ENGINEER: MOTOROLA	BLOCK TITLE: ap_pmic
LAST MODIFIED BY: MOTOROLA Fri Mar 31 09:12:37 2017	

MOTOROLA CONFIDENTIAL RESTRICTED
THE DRAWING ON THIS PRINT AND INFORMATION THEREWITH ARE PROPRIETARY TO MOTOROLA AND SHALL NOT BE USED OR DISCUSSED IN WHOLE OR IN PART WITHOUT MOTOROLA'S CONSENT.
© COPYRIGHT, MOTOROLA. THIS DOES NOT IMPLY PUBLICATION

B	PROJECT NAME 84016657001_a.cpm	REV 03
CAD FILE NAME:		PAGE 50 OF 91

PM8998: CLK/CTRL/GPIO

REFDES: 2000-2099

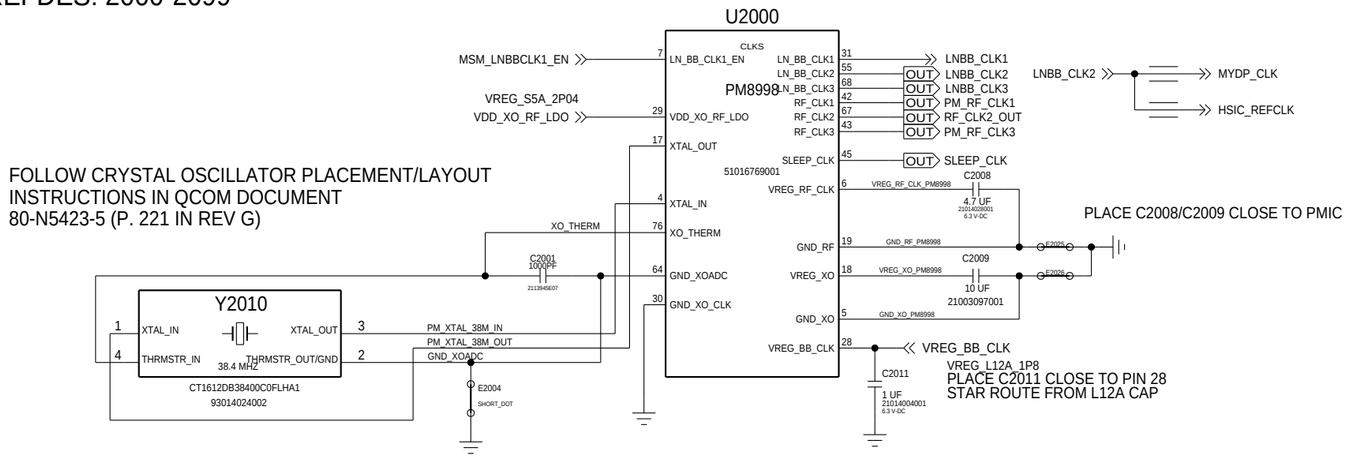

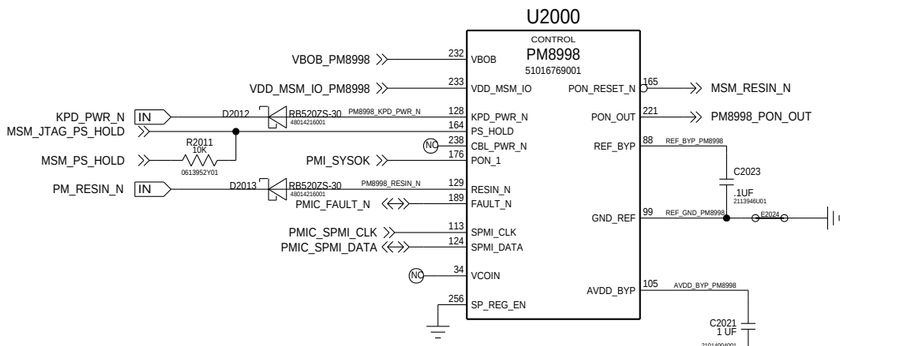

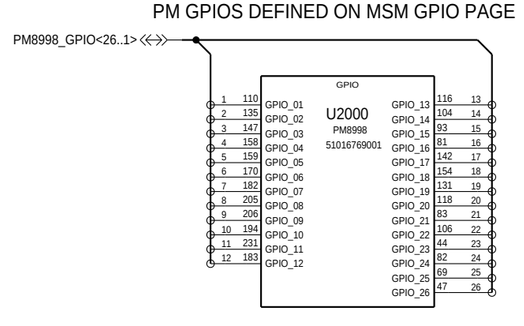

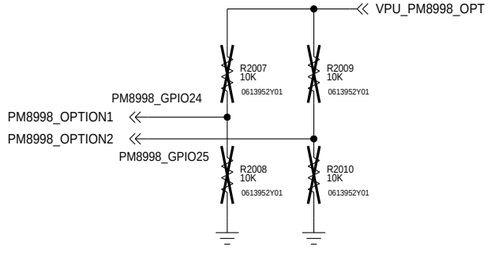

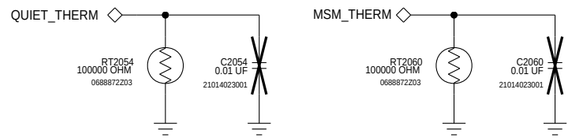

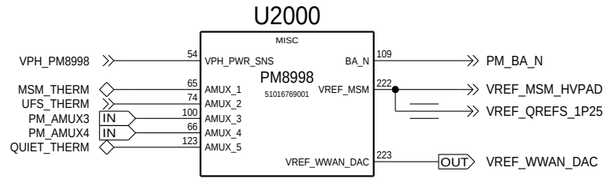

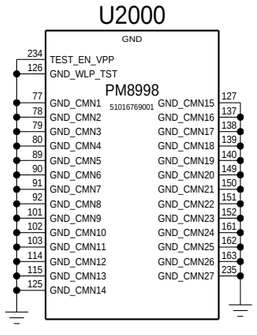

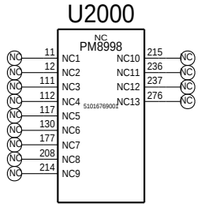

MOTOROLA MOBILITY CONFIDENTIAL RESTRICTED-MDB TRACKED TRACKEDANDBLOCKED

APPROVALS	MOTOROLA MOBILE DEVICES
ENGINEER: MOTOROLA	BLOCK TITLE: ap_pmic
LAST MODIFIED BY: MOTOROLA Fri Mar 31 09:16:11 2017	
MOTOROLA CONFIDENTIAL RESTRICTED	B | PROJECT NAME 84016657001_a.cpm | REV 03
CAD FILE NAME:	PAGE 51 OF 91

THE DRAWING ON THIS PRINT AND INFORMATION THEREWITH ARE PROPRIETARY TO MOTOROLA AND SHALL NOT BE USED OR DISCUSSED IN WHOLE OR IN PART WITHOUT MOTOROLA'S CONSENT.
© COPYRIGHT, MOTOROLA. THIS DOES NOT IMPLY PUBLICATION

PM8998: SMPS 1

REFDES: 2100-2199

SWITCHER INPUT BULK CAPS

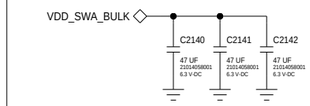

PM8998
U2000
51016769001

SREG_A

VDD_S8A_IN	178, 179	VDD_S8_1, VDD_S8_2	C2100 2.2 UF, GND_S8A, 2101407l1001, 10 V-DC	202, 203	GND_S8_1, GND_S8_2	
VDD_S9A_IN	251, 263, 275, 287	VDD_S9_1, VDD_S9_2, VDD_S9_3, VDD_S9_4	C2101 2.2 UF, GND_S8A, 2101407l1001, 10 V-DC	262, 286	GND_S9_1, GND_S9_2	
VDD_S10A_IN	249, 273, 285	VDD_S10_1, VDD_S10_2, VDD_S10_3	C2102 2.2 UF, GND_S10A, 2101407l1001, 10 V-DC	260, 284	GND_S10_1, GND_S10_2	
VDD_S11A_IN	247, 271	VDD_S11_1, VDD_S11_2	C2103 2.2 UF, GND_S11A, 2101407l1001, 10 V-DC	258, 270	GND_S11_1, GND_S11_2	
VDD_S12A_IN	269, 282	VDD_S12_1, VDD_S12_2	C2104 2.2 UF, GND_S12A, 2101407l1001, 10 V-DC	244, 268	GND_S12_1, GND_S12_2	
VDD_S13A_IN	267, 280	VDD_S13_1, VDD_S13_2	C2105 2.2 UF, GND_S13A, 2101407l1001, 10 V-DC	242, 266	GND_S13_1, GND_S13_2	

VREG_S8	188	VSENSE_S8A_P				
VSW_S8_1, VSW_S8_2, VSW_S8_3	190, 191, 201	VSW_S8A	L2150 0.47 UH 2401418l4003	VREG_S8A_0P8	REMOTE SENSE MSM	
VREF_NEG_S8	200	VSENSE_S8A_M				
VREG_S9	226	VSENSE_S9A_P				
VSW_S9_1, VSW_S9_2, VSW_S9_3	239, 250, 274	VSW_S9A	L2151 0.47 UH 2401418l4003	VREG_S9A_0P8	REMOTE SENSE MSM	
VREF_NEG_S9	227	VSENSE_S9A_M				
VREG_S10	213	VSENSE_S10A_P				
VSW_S10_1, VSW_S10_2, VSW_S10_3	248, 261, 272	VSW_S10A	L2152 0.47 UH 2401418l4003	VREG_S10A_0P75	REMOTE SENSE MSM	
VREF_NEG_S10	225	VSENSE_S10A_M				
VREG_S11	211					
VSW_S11_1, VSW_S11_2, VSW_S11_3	246, 259, 283	VSW_S11A	L2153 0.47 UH 2401418l4003			
VREF_NEG_S11	224					
VREG_S12	220	VSENSE_S11A_S12A_S13A_P				
VSW_S12_1, VSW_S12_2, VSW_S12_3	245, 257, 281	VSW_S12A	L2154 0.47 UH 2401418l4003	VREG_S11A_S12A_S13A_0P75	REMOTE SENSE MSM	
VREF_NEG_S12	209	VSENSE_S11A_S12A_S13A_M				
VREG_S13	218					
VSW_S13_1, VSW_S13_2, VSW_S13_3	243, 255, 279	VSW_S13A	L2155 0.47 UH 2401418l4003			
VREF_NEG_S13	207					

MOTOROLA MOBILITY CONFIDENTIAL RESTRICTED-MDB TRACKED TRACKEDANDBLOCKED

APPROVALS	MOTOROLA MOBILE DEVICES
ENGINEER: MOTOROLA	BLOCK TITLE: ap_pmic
LAST MODIFIED BY: MOTOROLA Fri Mar 31 09:16:13 2017	
MOTOROLA CONFIDENTIAL RESTRICTED	B / PROJECT NAME: 84016657001_a.cpm / REV: 03
CAD FILE NAME:	PAGE 52 OF 91

THE DRAWING ON THIS PRINT AND INFORMATION THEREWITH ARE PROPRIETARY TO MOTOROLA AND SHALL NOT BE USED OR DISCUSSED IN WHOLE OR IN PART WITHOUT MOTOROLA'S CONSENT.
© COPYRIGHT, MOTOROLA. THIS DOES NOT IMPLY PUBLICATION

PM8998: SMPS 2

REFDES: 2100-2199

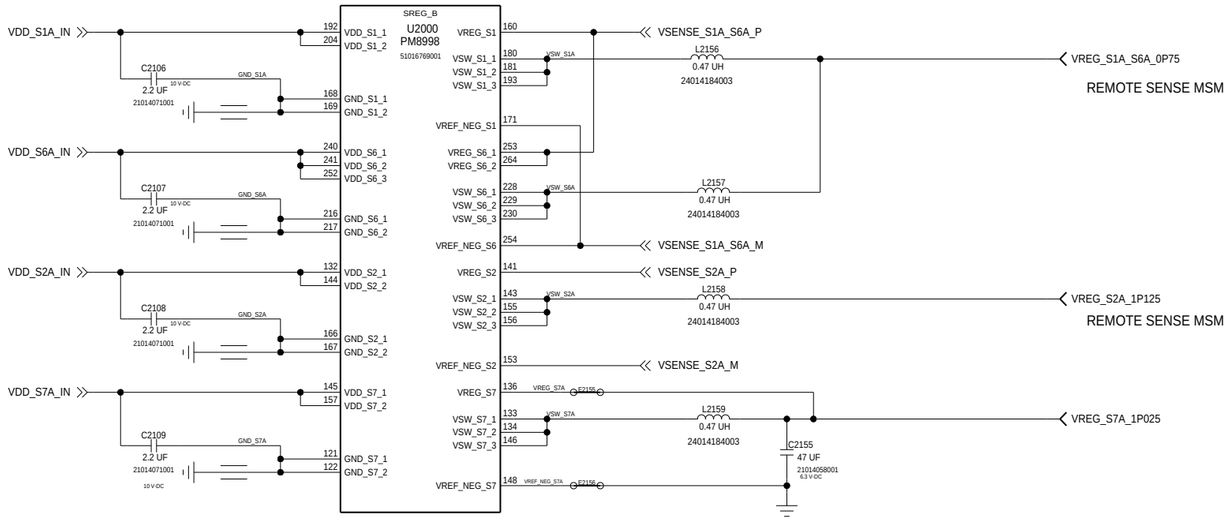

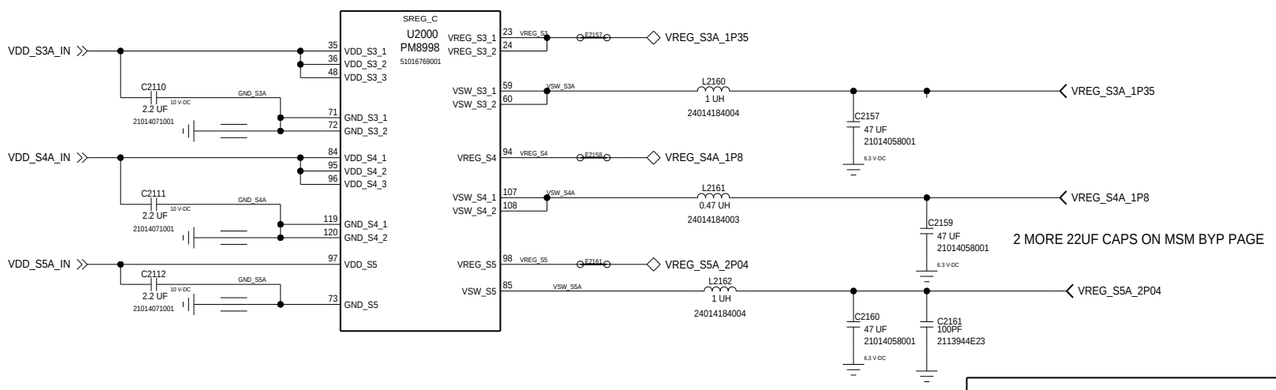

MOTOROLA MOBILITY CONFIDENTIAL RESTRICTED-MDB TRACKED TRACKEDANDBLOCKED

APPROVALS	MOTOROLA MOBILE DEVICES
ENGINEER: MOTOROLA	BLOCK TITLE: ap_pmic
LAST MODIFIED BY: MOTOROLA Fri Mar 31 09:16:10 2017	
MOTOROLA CONFIDENTIAL RESTRICTED	PROJECT NAME: B 84016657001_a.cpm — REV: 03
CAD FILE NAME:	PAGE 53 OF 91

THE DRAWING ON THIS PRINT AND INFORMATION THEREWITH ARE PROPRIETARY TO MOTOROLA AND SHALL NOT BE USED OR DISCUSSED IN WHOLE OR IN PART WITHOUT MOTOROLA'S CONSENT.
© COPYRIGHT, MOTOROLA. THIS DOES NOT IMPLY PUBLICATION

PM8998: VREGS

REFDES: 2200-2299

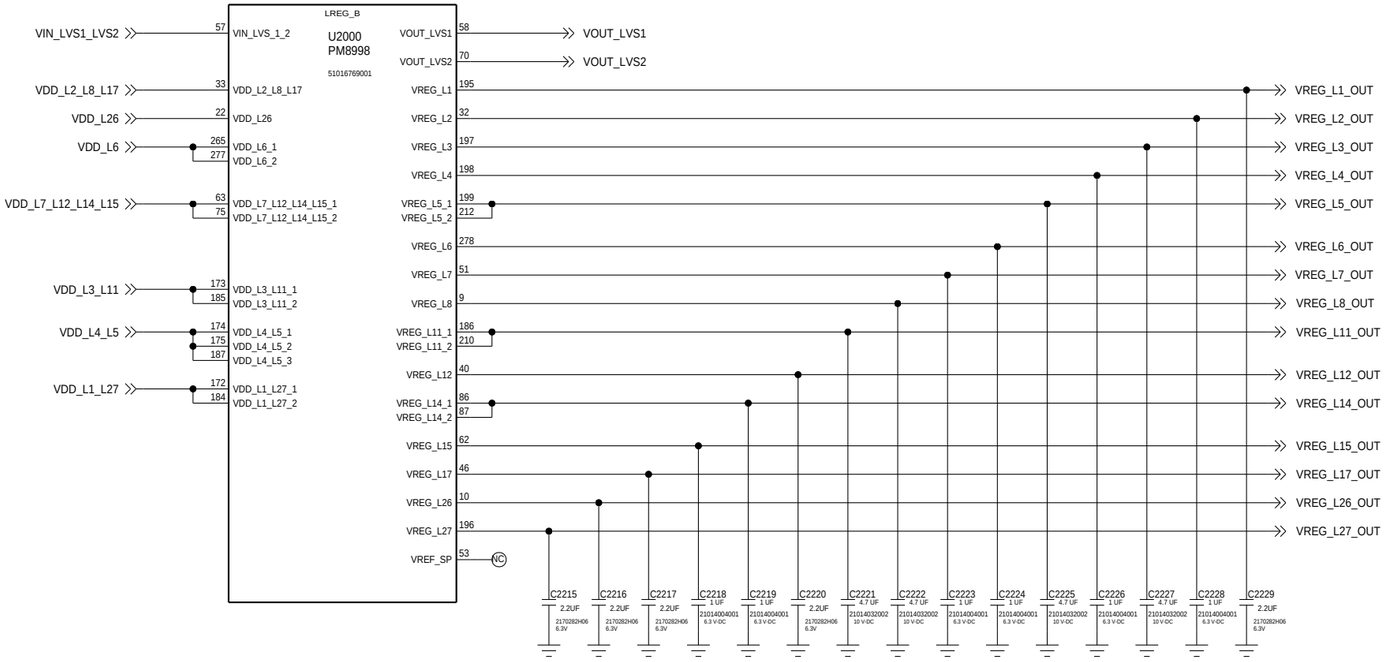

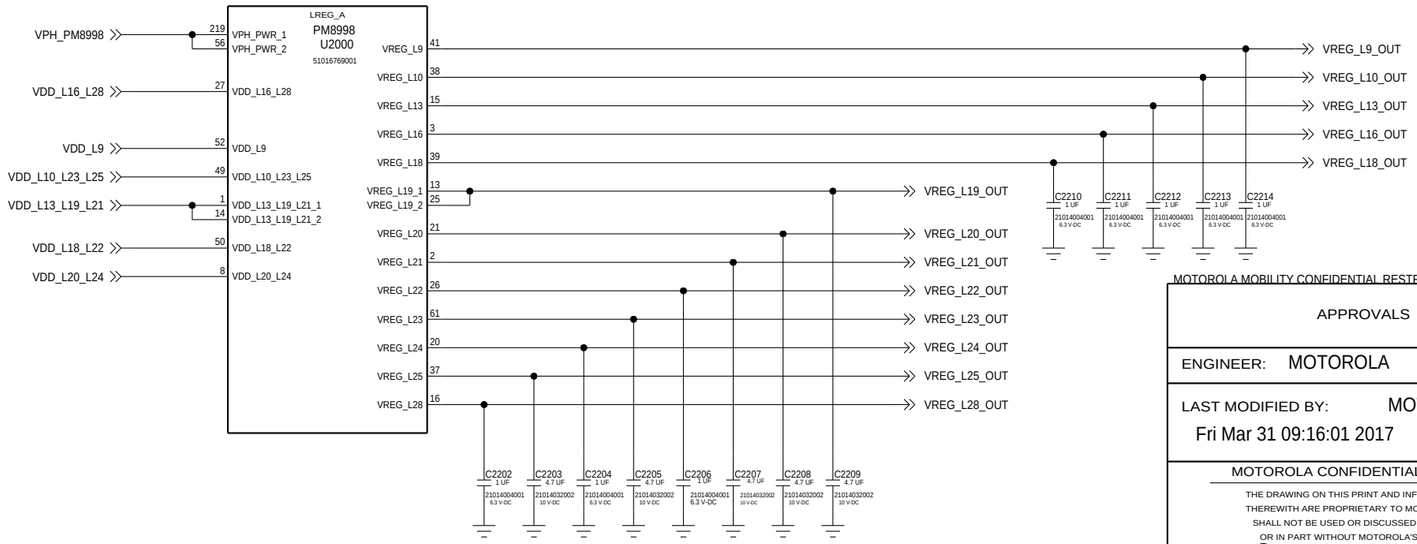

RF BOOST/BYPASS

I2C BASE ADDRESS: 0X75

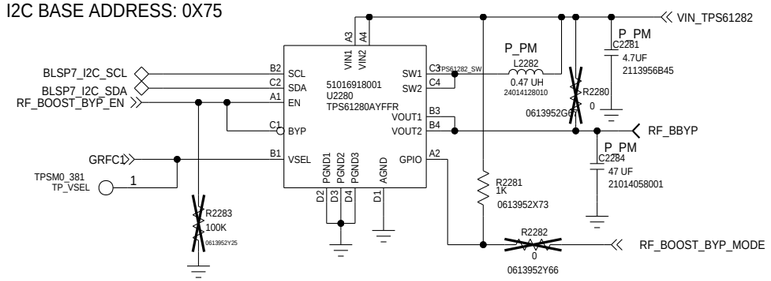

ISOLATE GNDS ON L1, L2 & L3 AND HAVE A COMMON GND ON 4

5V, 1.5A SWITCHER

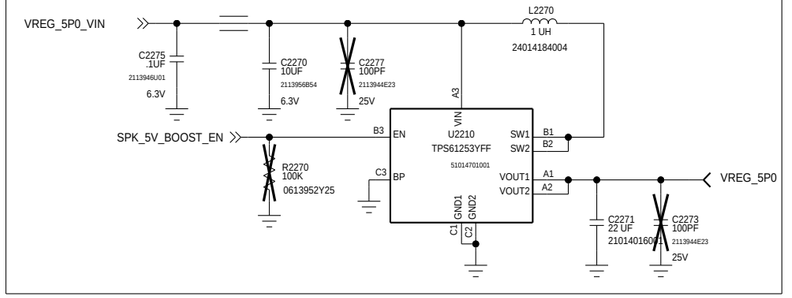

MOTOROLA MOBILITY CONFIDENTIAL RESTRICTED-MDB TRACKED TRACKEDANDBLOCKED

APPROVALS	MOTOROLA MOBILE DEVICES
ENGINEER: MOTOROLA	BLOCK TITLE: ap_pmic
LAST MODIFIED BY: MOTOROLA Fri Mar 31 09:16:01 2017	
MOTOROLA CONFIDENTIAL RESTRICTED	PROJECT NAME: 84016657001_a.cpm; REV: B 03
THE DRAWING ON THIS PRINT AND INFORMATION THEREWITH ARE PROPRIETARY TO MOTOROLA AND SHALL NOT BE USED OR DISCUSSED IN WHOLE OR IN PART WITHOUT MOTOROLA'S CONSENT. © COPYRIGHT, MOTOROLA. THIS DOES NOT IMPLY PUBLICATION	CAD FILE NAME:
	PAGE 54 OF 91

PM8005: POWER

REFDES: 2400-2499

INPUT POWER

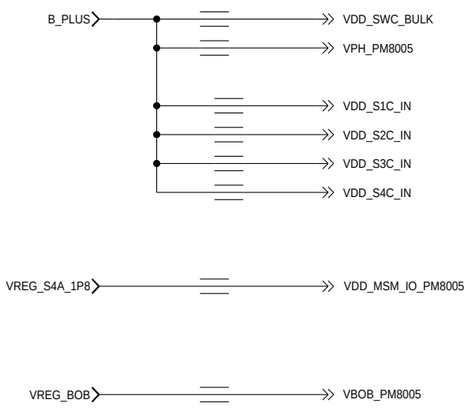

APPROVALS	MOTOROLA MOBILE DEVICES
ENGINEER: MOTOROLA	BLOCK TITLE: ap_pmic
LAST MODIFIED BY: MOTOROLA Fri Mar 31 09:12:40 2017	

MOTOROLA CONFIDENTIAL RESTRICTED
THE DRAWING ON THIS PRINT AND INFORMATION THEREWITH ARE PROPRIETARY TO MOTOROLA AND SHALL NOT BE USED OR DISCUSSED IN WHOLE OR IN PART WITHOUT MOTOROLA'S CONSENT.
© COPYRIGHT, MOTOROLA. THIS DOES NOT IMPLY PUBLICATION

B	PROJECT NAME 84016657001_a.cpm	REV 03
CAD FILE NAME:		PAGE 55 OF 91

PM8005: CONTROL

REFDES: 2400-2499

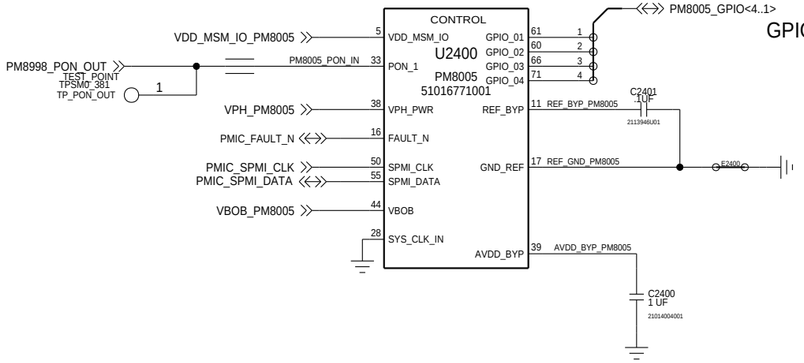

GPIOS DEFINED ON GPIO PAGE

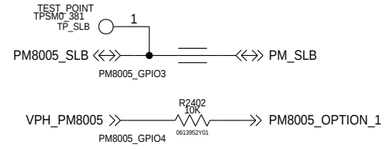

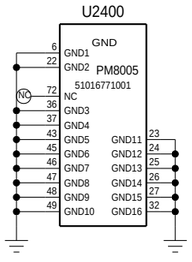

APPROVALS	MOTOROLA MOBILE DEVICES
ENGINEER: MOTOROLA	BLOCK TITLE: ap_pmic
LAST MODIFIED BY: MOTOROLA Fri Mar 31 09:16:18 2017	
MOTOROLA CONFIDENTIAL RESTRICTED	B | PROJECT NAME 84016657001_a.cpm | REV 03
CAD FILE NAME:	PAGE 56 OF 91

THE DRAWING ON THIS PRINT AND INFORMATION THEREWITH ARE PROPRIETARY TO MOTOROLA AND SHALL NOT BE USED OR DISCUSSED IN WHOLE OR IN PART WITHOUT MOTOROLA'S CONSENT.
© COPYRIGHT, MOTOROLA. THIS DOES NOT IMPLY PUBLICATION

PM8005: SMPS

REFDES: 2400-2499

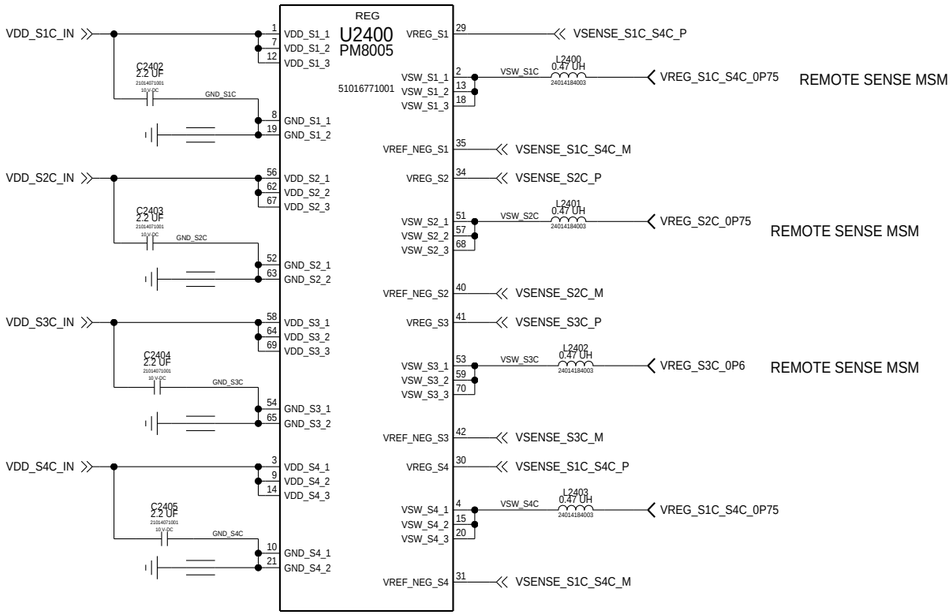

SWITCHER INPUT BULK CAPS

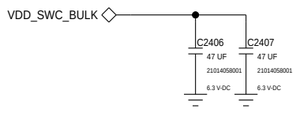

APPROVALS	MOTOROLA MOBILE DEVICES
ENGINEER: MOTOROLA	BLOCK TITLE: ap_pmic
LAST MODIFIED BY: MOTOROLA Fri Mar 31 09:16:17 2017	
MOTOROLA CONFIDENTIAL RESTRICTED	B / PROJECT NAME: 84016657001_a.cpm / REV: 03
CAD FILE NAME:	PAGE 57 OF 91

THE DRAWING ON THIS PRINT AND INFORMATION THEREWITH ARE PROPRIETARY TO MOTOROLA AND SHALL NOT BE USED OR DISCUSSED IN WHOLE OR IN PART WITHOUT MOTOROLA'S CONSENT.
© COPYRIGHT, MOTOROLA. THIS DOES NOT IMPLY PUBLICATION

PMI8998: POWER

REFDES: 2400-2499

INPUT POWER

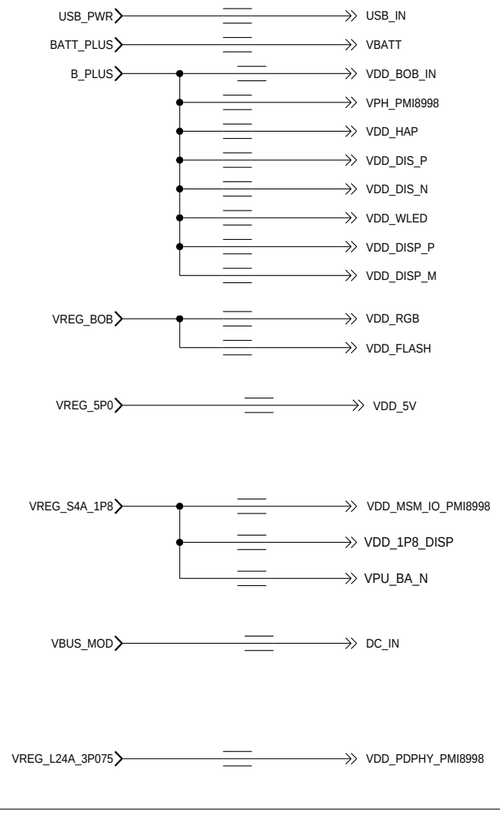

OUTPUT POWER

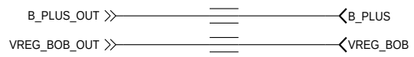

APPROVALS	MOTOROLA MOBILE DEVICES
ENGINEER: MOTOROLA	BLOCK TITLE: ap_pmic
LAST MODIFIED BY: MOTOROLA Fri Mar 31 09:12:42 2017	
MOTOROLA CONFIDENTIAL RESTRICTED	B | PROJECT NAME 84016657001_a.cpm | REV 03
CAD FILE NAME:	PAGE 58 OF 91

THE DRAWING ON THIS PRINT AND INFORMATION THEREWITH ARE PROPRIETARY TO MOTOROLA AND SHALL NOT BE USED OR DISCUSSED IN WHOLE OR IN PART WITHOUT MOTOROLA'S CONSENT.
© COPYRIGHT, MOTOROLA. THIS DOES NOT IMPLY PUBLICATION

PMI8998: CHG/USB

REFDES: 2500-2599

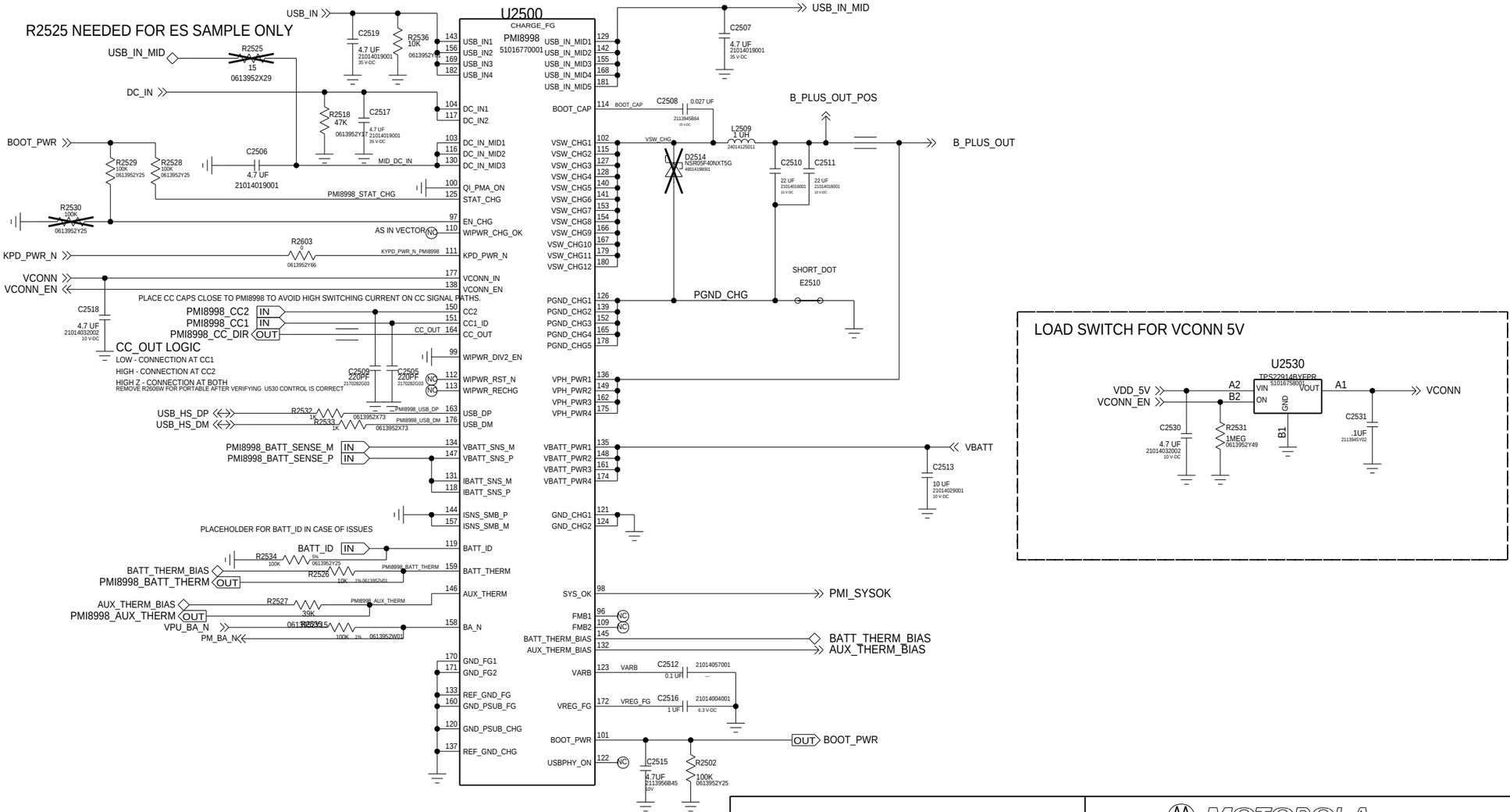

APPROVALS	MOTOROLA MOBILE DEVICES
ENGINEER: MOTOROLA	BLOCK TITLE: ap_pmic
LAST MODIFIED BY: MOTOROLA Fri Mar 31 09:16:07 2017	
MOTOROLA CONFIDENTIAL RESTRICTED THE DRAWING ON THIS PRINT AND INFORMATION THEREWITH ARE PROPRIETARY TO MOTOROLA AND SHALL NOT BE USED OR DISCUSSED IN WHOLE OR IN PART WITHOUT MOTOROLA'S CONSENT. © COPYRIGHT, MOTOROLA. THIS DOES NOT IMPLY PUBLICATION	B · PROJECT NAME: 84016657001_a.cpm · REV: 03 CAD FILE NAME: · PAGE 59 OF 91

PMI8998: CTRL/GPIO/HAP

REFDES: 2600-2699

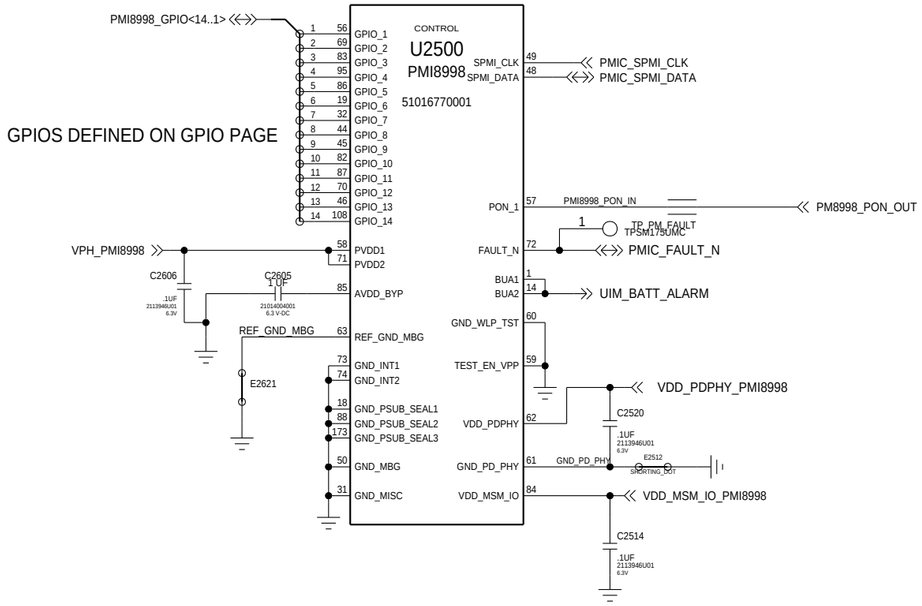

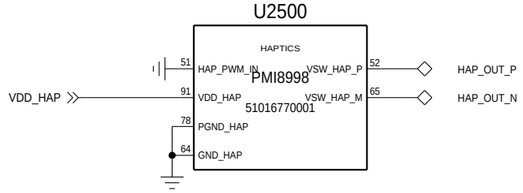

APPROVALS	MOTOROLA MOBILE DEVICES
ENGINEER: MOTOROLA	BLOCK TITLE: ap_pmic
LAST MODIFIED BY: MOTOROLA Fri Mar 31 09:16:05 2017	
MOTOROLA CONFIDENTIAL RESTRICTED	B | PROJECT NAME 84016657001_a.cpm | REV 03
CAD FILE NAME:	PAGE 60 OF 91

THE DRAWING ON THIS PRINT AND INFORMATION THEREWITH ARE PROPRIETARY TO MOTOROLA AND SHALL NOT BE USED OR DISCUSSED IN WHOLE OR IN PART WITHOUT MOTOROLA'S CONSENT.
© COPYRIGHT, MOTOROLA. THIS DOES NOT IMPLY PUBLICATION

PMI8998: REF/WLED/RBG/BB

REFDES: 2700-2799

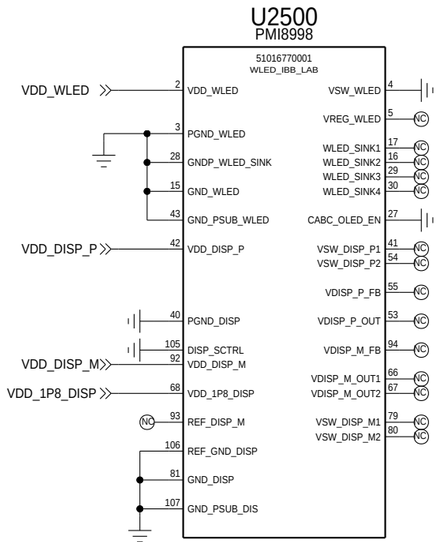

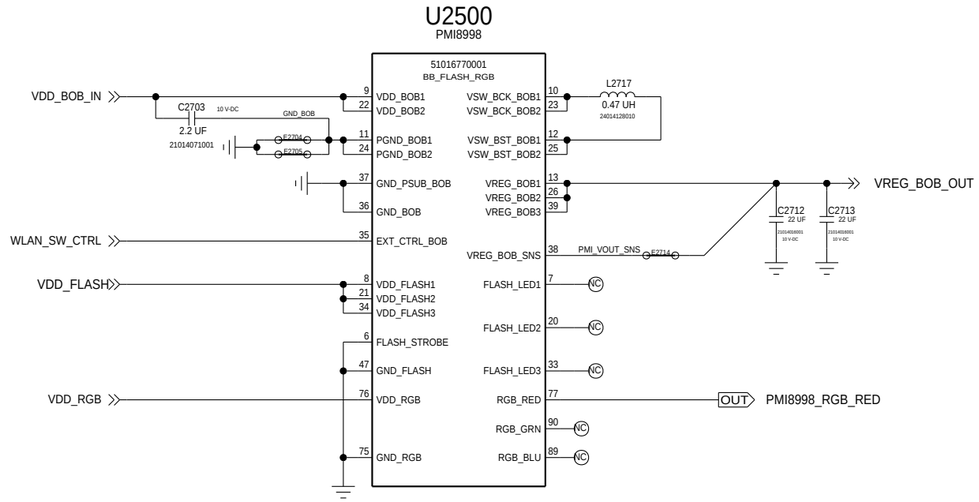

APPROVALS	MOTOROLA MOBILE DEVICES
ENGINEER: MOTOROLA	BLOCK TITLE: ap_pmic
LAST MODIFIED BY: MOTOROLA Fri Mar 31 09:16:06 2017	
MOTOROLA CONFIDENTIAL RESTRICTED	B | PROJECT NAME: 84016657001_a.cpm | REV: 03
CAD FILE NAME:	PAGE 61 OF 91

THE DRAWING ON THIS PRINT AND INFORMATION THEREWITH ARE PROPRIETARY TO MOTOROLA AND SHALL NOT BE USED OR DISCUSSED IN WHOLE OR IN PART WITHOUT MOTOROLA'S CONSENT.
© COPYRIGHT, MOTOROLA. THIS DOES NOT IMPLY PUBLICATION

MODS: PORTS

REF: 700-799

ALL CONNECTIONS EQUIVALENT TO VECTOR P10 EXCEPT VDD_HD3SS360

SUPPLIES

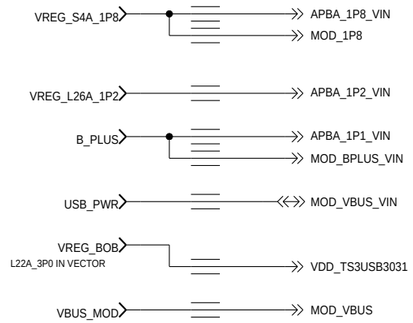

INTERFACES

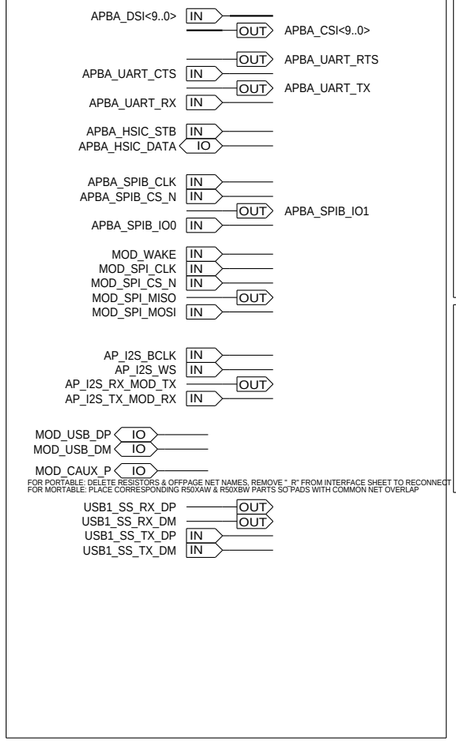

GPIO - INPUT

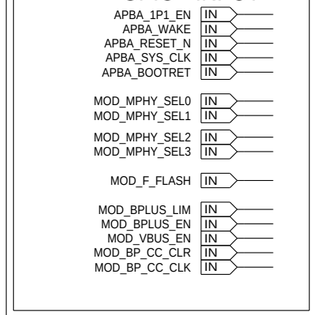

GPIO - OUTPUT

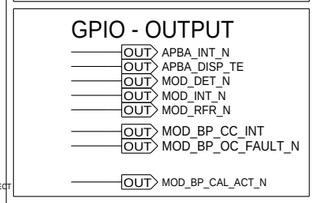

APPROVALS	MOTOROLA MOBILE DEVICES
ENGINEER: MOTOROLA	BLOCK TITLE: slice_if
LAST MODIFIED BY: MOTOROLA Fri Mar 31 09:12:22 2017	
MOTOROLA CONFIDENTIAL RESTRICTED	B | PROJECT NAME: 84016657001_a.cpm | REV: 03
CAD FILE NAME:	PAGE 62 OF 91

THE DRAWING ON THIS PRINT AND INFORMATION THEREWITH ARE PROPRIETARY TO MOTOROLA AND SHALL NOT BE USED OR DISCUSSED IN WHOLE OR IN PART WITHOUT MOTOROLA'S CONSENT.
© COPYRIGHT, MOTOROLA. THIS DOES NOT IMPLY PUBLICATION

MODS: CONTACTS

REF: 740-759

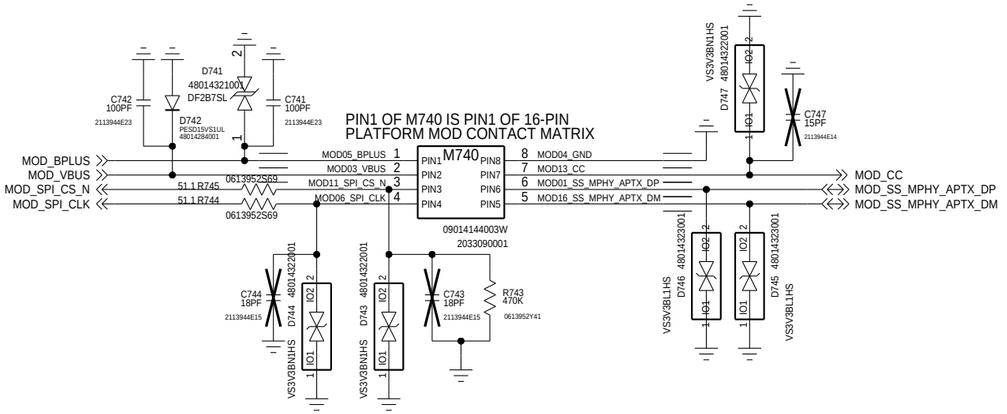

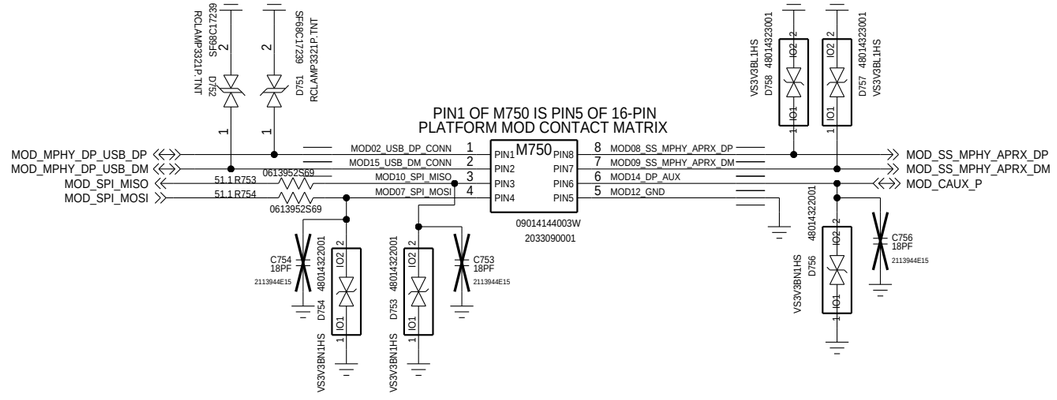

APPROVALS	MOTOROLA MOBILE DEVICES
ENGINEER: MOTOROLA	BLOCK TITLE: slice_if
LAST MODIFIED BY: MOTOROLA Sun Apr 09 17:05:22 2017	
MOTOROLA CONFIDENTIAL RESTRICTED THE DRAWING ON THIS PRINT AND INFORMATION THEREWITH ARE PROPRIETARY TO MOTOROLA AND SHALL NOT BE USED OR DISCUSSED IN WHOLE OR IN PART WITHOUT MOTOROLA'S CONSENT. © COPYRIGHT, MOTOROLA. THIS DOES NOT IMPLY PUBLICATION	B · PROJECT NAME: 84016657001_a.cpm · REV: 03 CAD FILE NAME: · PAGE 63 OF 91

MOTOROLA MOBILITY CONFIDENTIAL RESTRICTED-MDB TRACKED TRACKEDANDBLOCKED

MODS: INTERFACE

REF: 700-739

MODS BPLUS POWER SWITCH

REF: 710-719

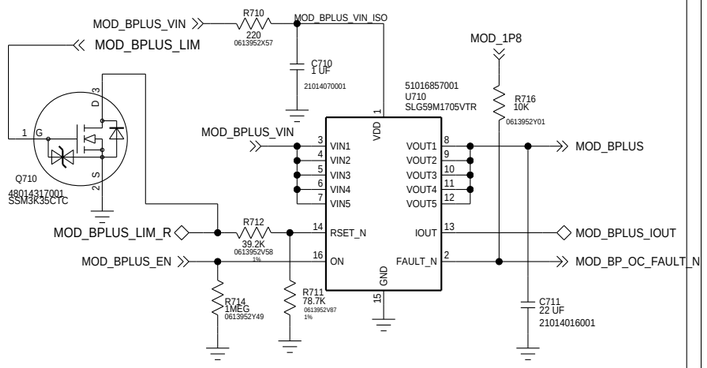

MODS BPLUS CURRENT MONITOR

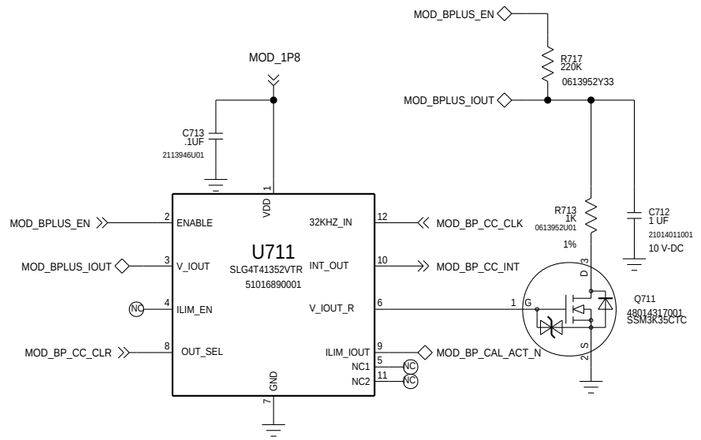

MODS DETECTION

REF: 700-709

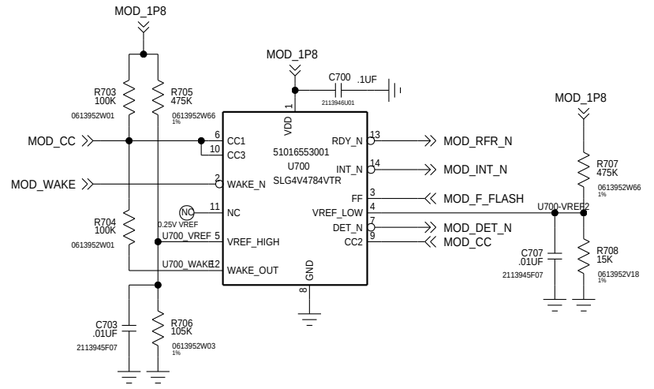

MODS VBUS POWER

REF: 720-729

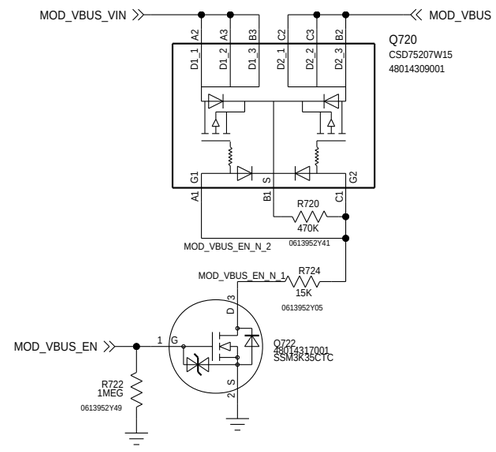

MODS MUXES

REF: 730-739

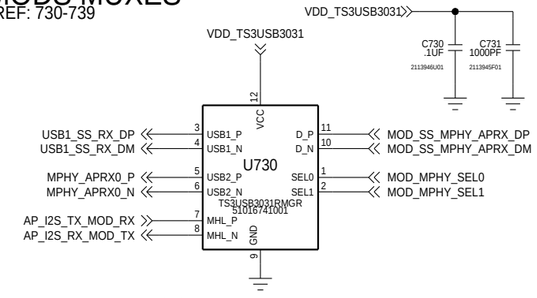

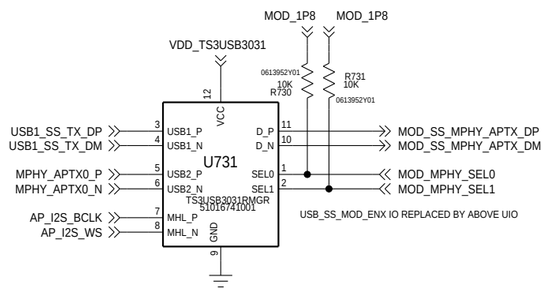

CONTROLS FOR MPHY LANE0/SPI/I2S PATHS TO MOD CONNECTOR

MOD_MPHY_SEL1	MOD_MPHY_SEL0	PATH
0	0	USB SS
0	1	MPHY
1	0	I2S
1	1	HIGH Z

CONTROLS FOR SWITCHING ASYMMETRIC MPHY/DP/USB-HS PATH TO MODS CONNECTOR

MOD_MPHY_SEL3	MOD_MPHY_SEL2	PATH
0	0	DP/USB-HS
0	1	MPHY RX (CSI)
1	0	MPHY TX (DSI)
1	1	HIGH Z

ADD SYNONYMS BELOW IF U732/C732 PACK IGNORED (NO ASYMMETRIC MPHY SUPPORT)

MOD_USB_DP — MOD_MPHY_DP_USB_DP

MOD_USB_DM — MOD_MPHY_DP_USB_DM

APPROVALS	MOTOROLA MOBILE DEVICES
ENGINEER: MOTOROLA	BLOCK TITLE: slice_if
LAST MODIFIED BY: MOTOROLA Fri Mar 31 09:16:26 2017	
MOTOROLA CONFIDENTIAL RESTRICTED	PROJECT NAME: B 84016657001_a.cpm — REV: 03
	CAD FILE NAME: — PAGE 64 OF 91

THE DRAWING ON THIS PRINT AND INFORMATION THEREWITH ARE PROPRIETARY TO MOTOROLA AND SHALL NOT BE USED OR DISCUSSED IN WHOLE OR IN PART WITHOUT MOTOROLA'S CONSENT.
© COPYRIGHT, MOTOROLA. THIS DOES NOT IMPLY PUBLICATION

MOTOROLA MOBILITY CONFIDENTIAL RESTRICTED-MDB TRACKED TRACKEDANDBLOCKED

MODS: BRIDGE

REF: 760-779

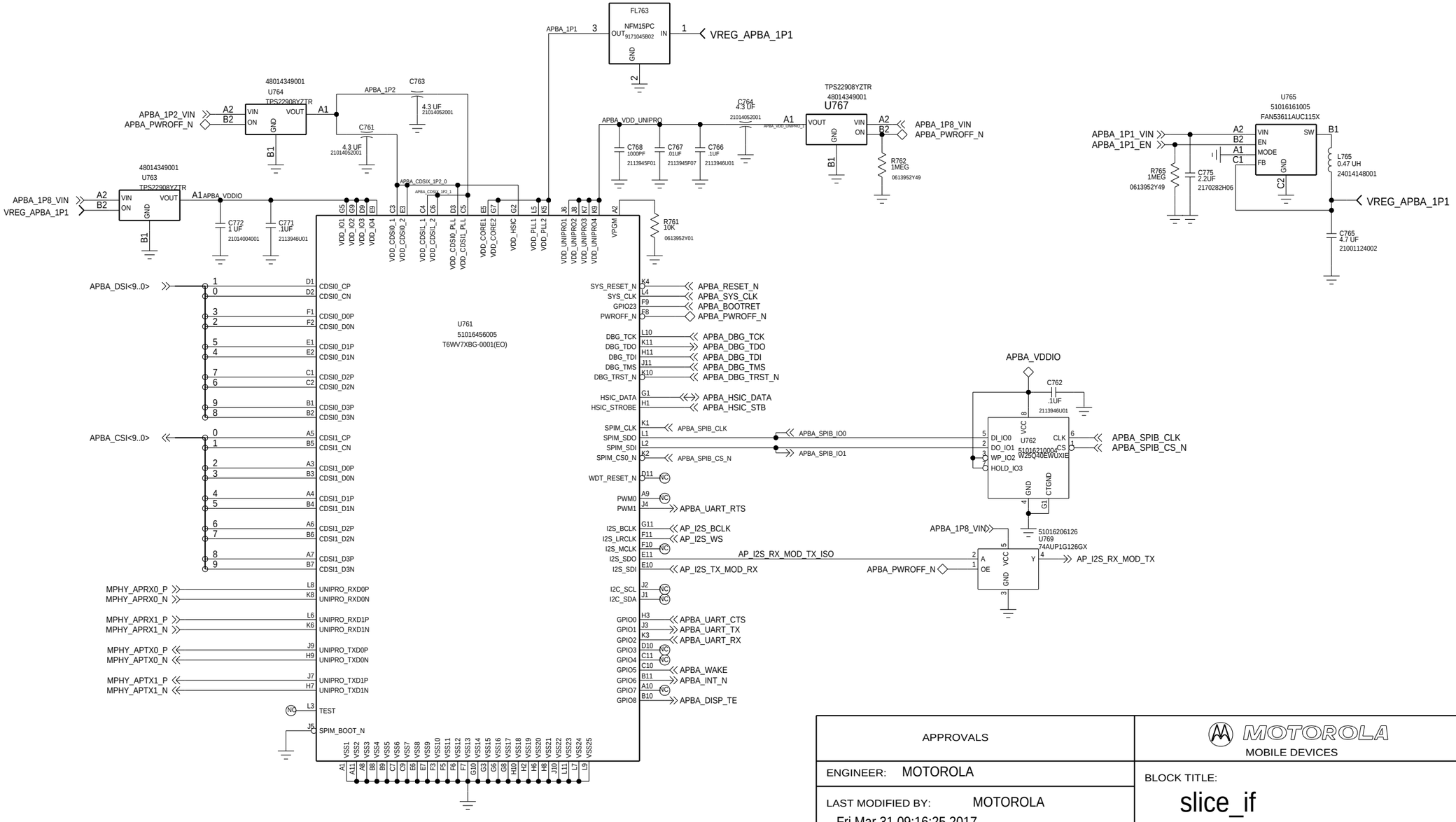

APPROVALS	MOTOROLA MOBILE DEVICES
ENGINEER: MOTOROLA	BLOCK TITLE: slice_if
LAST MODIFIED BY: MOTOROLA Fri Mar 31 09:16:25 2017	
MOTOROLA CONFIDENTIAL RESTRICTED	B | PROJECT NAME 84016657001_a.cpm | REV 03
THE DRAWING ON THIS PRINT AND INFORMATION THEREWITH ARE PROPRIETARY TO MOTOROLA AND SHALL NOT BE USED OR DISCUSSED IN WHOLE OR IN PART WITHOUT MOTOROLA'S CONSENT. © COPYRIGHT, MOTOROLA. THIS DOES NOT IMPLY PUBLICATION	CAD FILE NAME: | PAGE 65 OF 91

WTR5975: PORTS

REF 3100-3149

SUPPLIES

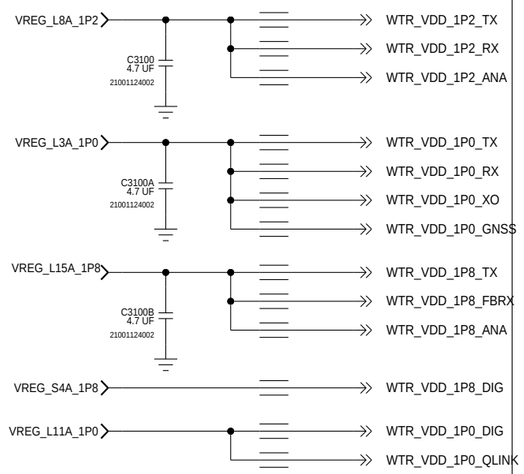

RFFE MIPI

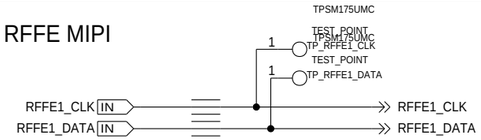

CURRENT DRAIN

TRANSMITTER - RF

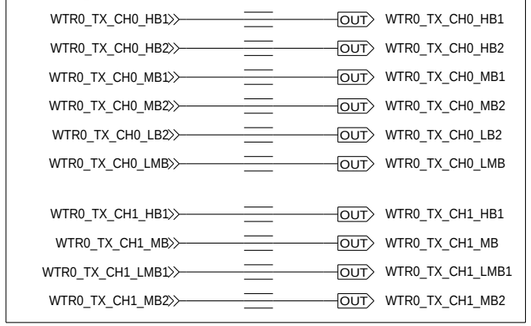

RECEIVER - RF

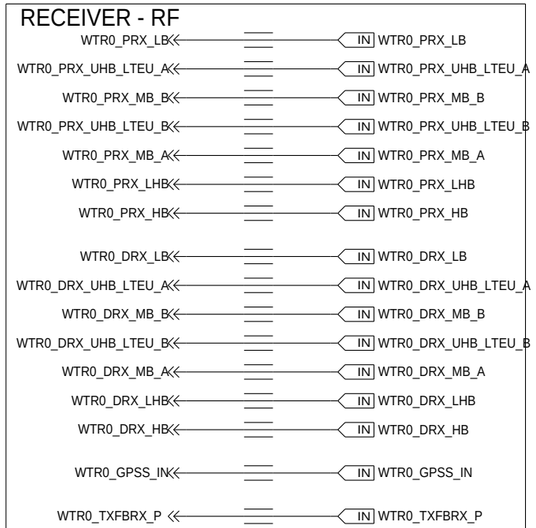

WTR GRFC

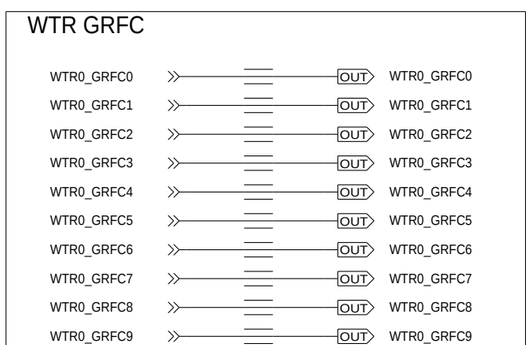

AP / PMIC INTERFACES

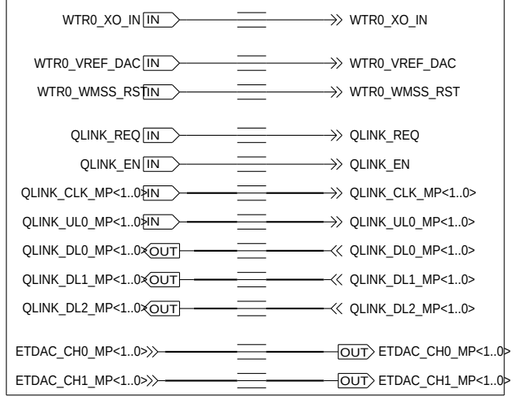

APPROVALS	MOTOROLA MOBILE DEVICES
ENGINEER: MOTOROLA	BLOCK TITLE: blk_wtr5975
LAST MODIFIED BY: MOTOROLA Fri Mar 31 09:16:29 2017	
MOTOROLA CONFIDENTIAL RESTRICTED	PROJECT NAME: 8974_gen_7001_a.cpm; REV: 03
CAD FILE NAME:	PAGE 66 OF 91

THE DRAWING ON THIS PRINT AND INFORMATION THEREWITH ARE PROPRIETARY TO MOTOROLA AND SHALL NOT BE USED OR DISCUSSED IN WHOLE OR IN PART WITHOUT MOTOROLA'S CONSENT.
© COPYRIGHT, MOTOROLA. THIS DOES NOT IMPLY PUBLICATION

WTR5975: PWR / GND

REF 3010-3049

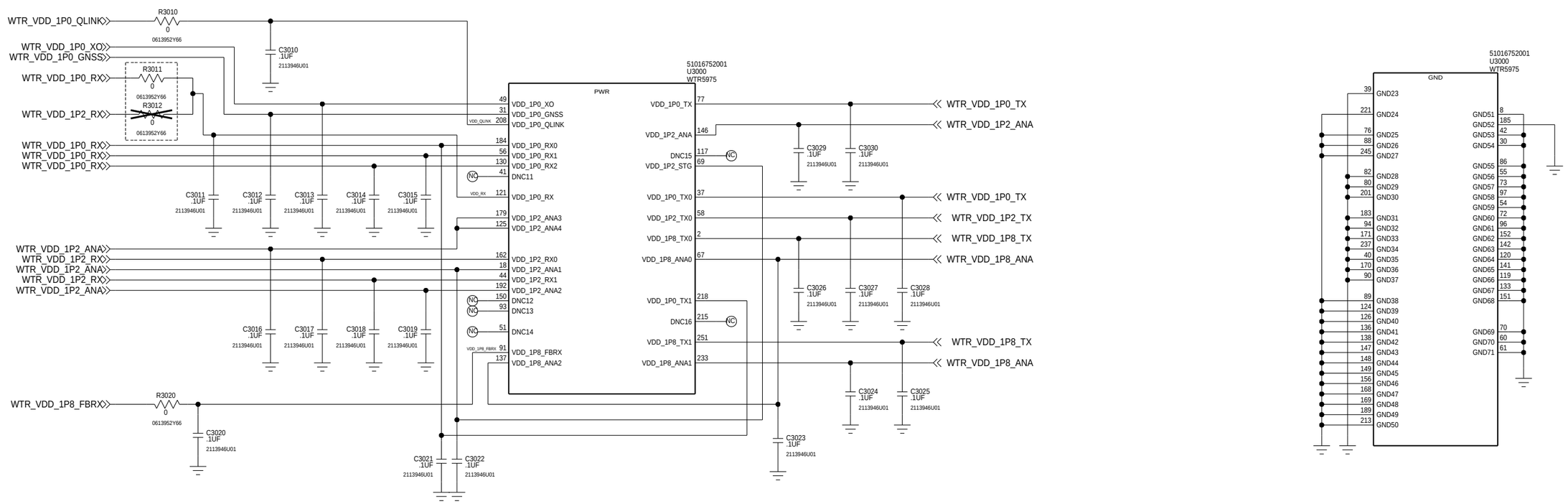

APPROVALS	MOTOROLA MOBILE DEVICES
ENGINEER: MOTOROLA	BLOCK TITLE: blk_wtr5975
LAST MODIFIED BY: MOTOROLA Fri Mar 31 09:16:32 2017	
MOTOROLA CONFIDENTIAL RESTRICTED	B — PROJECT NAME 84716657001_a.cpm — REV 01
THE DRAWING ON THIS PRINT AND INFORMATION THEREWITH ARE PROPRIETARY TO MOTOROLA AND SHALL NOT BE USED OR DISCUSSED IN WHOLE OR IN PART WITHOUT MOTOROLA'S CONSENT. © COPYRIGHT, MOTOROLA. THIS DOES NOT IMPLY PUBLICATION	CAD FILE NAME: — PAGE 67 OF 91

WTR5975: RF

REF 3050-3099

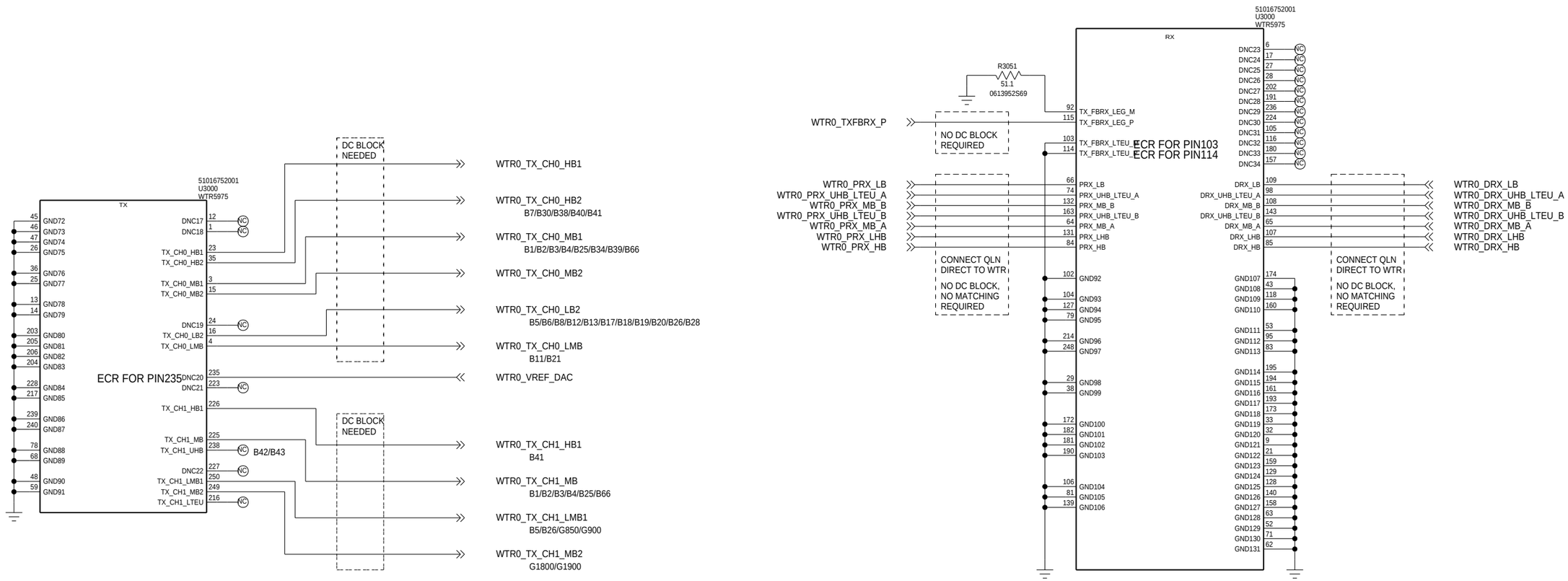

APPROVALS	MOTOROLA MOBILE DEVICES
ENGINEER: MOTOROLA	BLOCK TITLE: blk_wtr5975
LAST MODIFIED BY: MOTOROLA Fri Mar 31 09:16:30 2017	
MOTOROLA CONFIDENTIAL RESTRICTED	B — PROJECT NAME: 89716657001_a.cpm — REV: 01
	CAD FILE NAME:

THE DRAWING ON THIS PRINT AND INFORMATION THEREWITH ARE PROPRIETARY TO MOTOROLA AND SHALL NOT BE USED OR DISCUSSED IN WHOLE OR IN PART WITHOUT MOTOROLA'S CONSENT.
© COPYRIGHT, MOTOROLA. THIS DOES NOT IMPLY PUBLICATION

WTR5975: CTRL / QLINK

REF 3000-3009

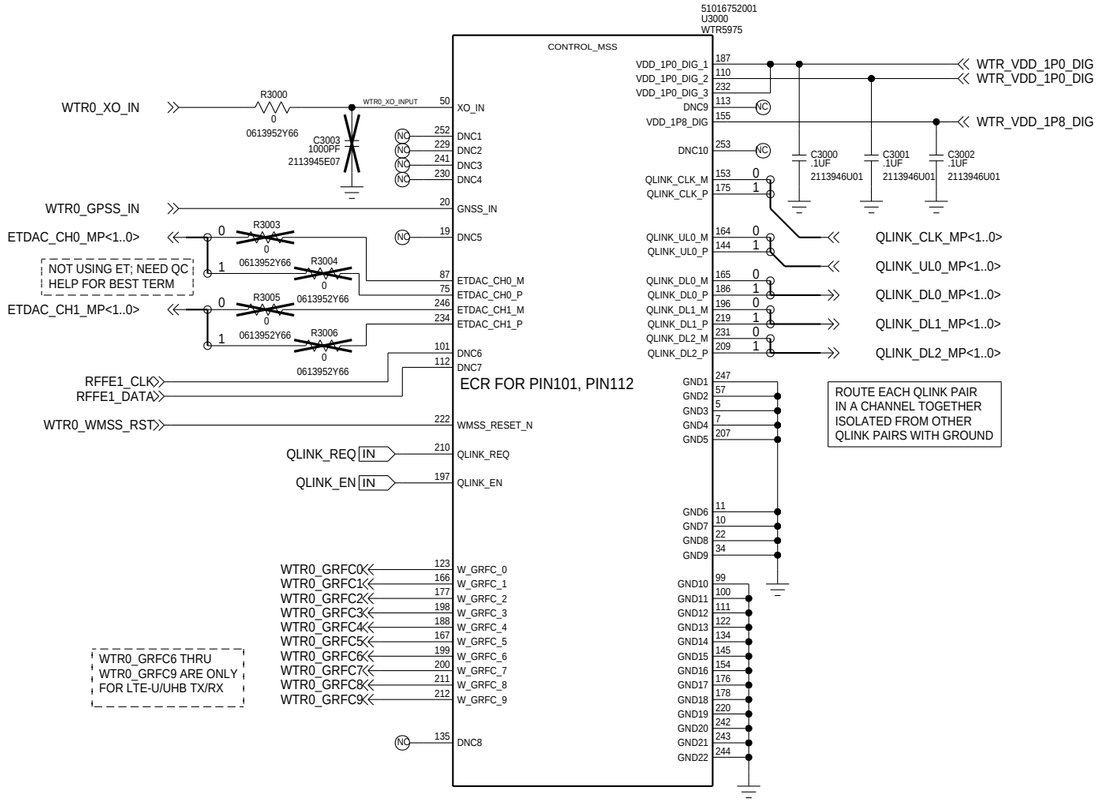

APPROVALS	MOTOROLA MOBILE DEVICES
ENGINEER: MOTOROLA	BLOCK TITLE: blk_wtr5975
LAST MODIFIED BY: MOTOROLA Fri Mar 31 09:16:31 2017	
MOTOROLA CONFIDENTIAL RESTRICTED	B — PROJECT NAME 89716657001_a.cpm — REV 01
	CAD FILE NAME: — PAGE 69 OF 91

THE DRAWING ON THIS PRINT AND INFORMATION THEREWITH ARE PROPRIETARY TO MOTOROLA AND SHALL NOT BE USED OR DISCUSSED IN WHOLE OR IN PART WITHOUT MOTOROLA'S CONSENT.
© COPYRIGHT, MOTOROLA. THIS DOES NOT IMPLY PUBLICATION

AFE: PORTS

REF 4500-4999

POWER

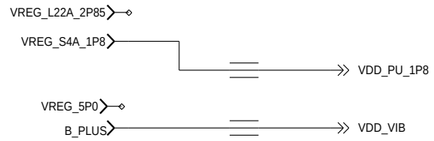

INTERFACES

INPUTS

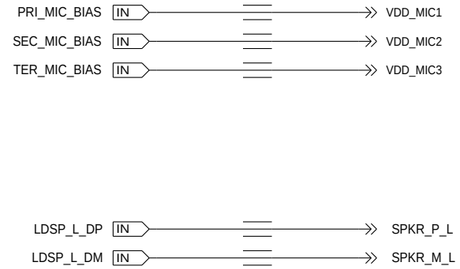

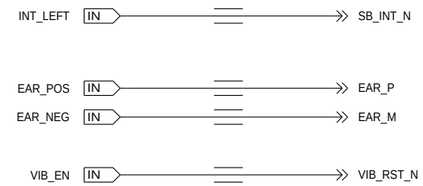

OUTPUTS

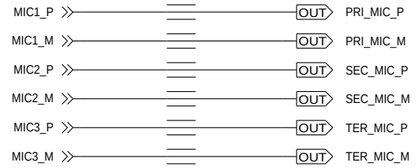

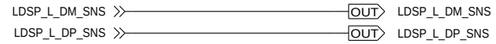

APPROVALS	MOTOROLA MOBILE DEVICES
ENGINEER: MOTOROLA	BLOCK TITLE: audio_fe
LAST MODIFIED BY: MOTOROLA Fri Mar 31 09:13:12 2017	

MOTOROLA CONFIDENTIAL RESTRICTED

THE DRAWING ON THIS PRINT AND INFORMATION THEREWITH ARE PROPRIETARY TO MOTOROLA AND SHALL NOT BE USED OR DISCUSSED IN WHOLE OR IN PART WITHOUT MOTOROLA'S CONSENT.
© COPYRIGHT, MOTOROLA. THIS DOES NOT IMPLY PUBLICATION

PROJECT NAME	REV
B 84016657001_a.cpm	03
CAD FILE NAME:	PAGE 70 OF 91

AFE: MICS

REF: 4500-4599

MIC 1

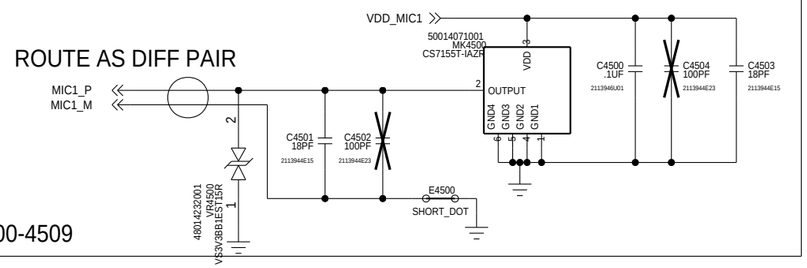

REF: 4500-4509

MIC 2

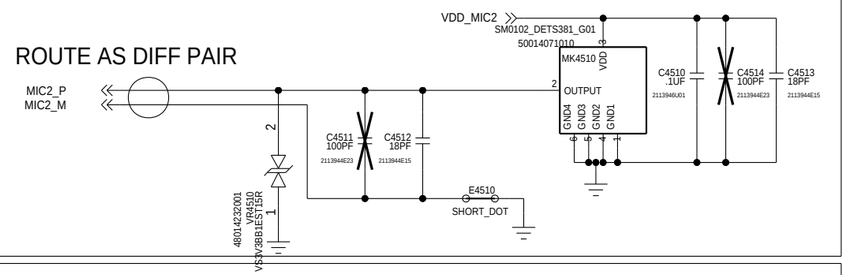

REF:4510-4519

MIC 3

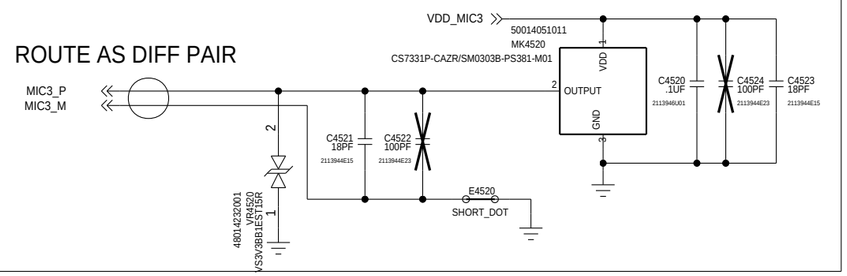

REF:4520-4529

APPROVALS	MOTOROLA MOBILE DEVICES
ENGINEER: MOTOROLA	BLOCK TITLE: audio_fe
LAST MODIFIED BY: MOTOROLA Fri Mar 31 09:16:36 2017	

MOTOROLA CONFIDENTIAL RESTRICTED

THE DRAWING ON THIS PRINT AND INFORMATION THEREWITH ARE PROPRIETARY TO MOTOROLA AND SHALL NOT BE USED OR DISCUSSED IN WHOLE OR IN PART WITHOUT MOTOROLA'S CONSENT.
© COPYRIGHT, MOTOROLA. THIS DOES NOT IMPLY PUBLICATION

B	PROJECT NAME 84016657001_a.cpm	REV 03
	CAD FILE NAME:	PAGE 71 OF 91

AFE: SPEAKERS

REF: 4600-4799

LOUDSPEAKER LEFT / EARPIECE (TOP)

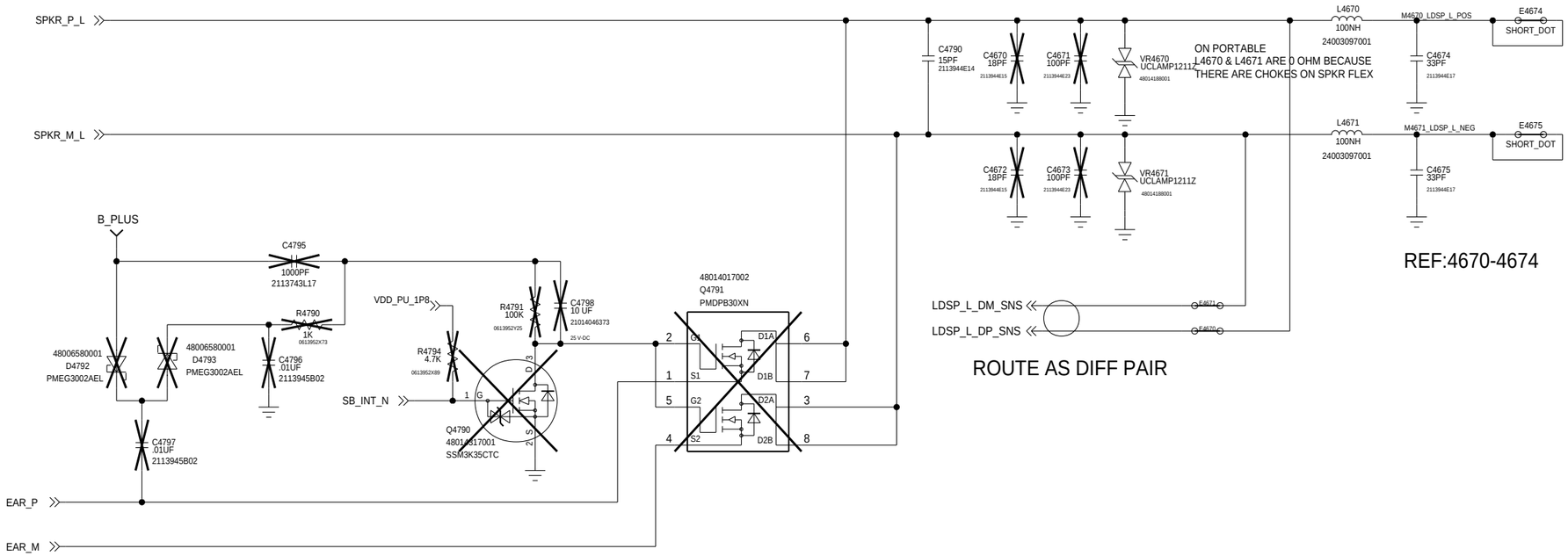

LINEAR VIBRATOR

REF DES 4600-4619

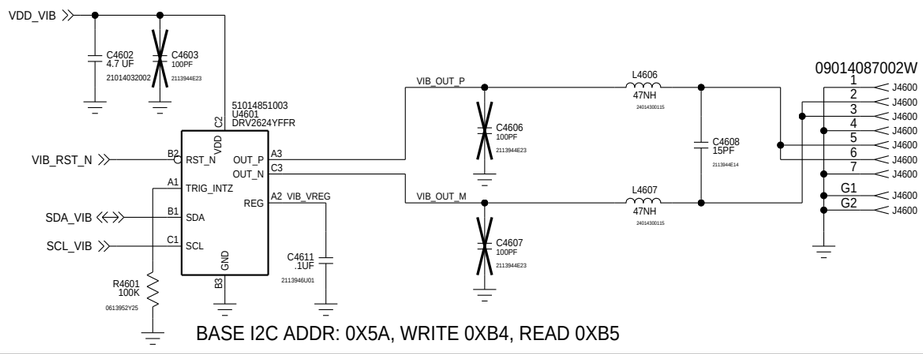

BASE I2C ADDR: 0X5A, WRITE 0XB4, READ 0XB5

MOTOROLA MOBILITY CONFIDENTIAL RESTRICTED-MDB TRACKED TRACKEDANDBLOCKED

APPROVALS	MOTOROLA MOBILE DEVICES
ENGINEER: MOTOROLA	BLOCK TITLE: audio_fe
LAST MODIFIED BY: MOTOROLA Fri Mar 31 09:16:34 2017	
MOTOROLA CONFIDENTIAL RESTRICTED	B | PROJECT NAME 84016657001_a.cpm | REV 03
CAD FILE NAME:	PAGE 72 OF 91

THE DRAWING ON THIS PRINT AND INFORMATION THEREWITH ARE PROPRIETARY TO MOTOROLA AND SHALL NOT BE USED OR DISCUSSED IN WHOLE OR IN PART WITHOUT MOTOROLA'S CONSENT.
© COPYRIGHT, MOTOROLA. THIS DOES NOT IMPLY PUBLICATION

AFE: 3.5MM HEADSET

AUDIO JACK DETECTION
REF:4800-4849

FSA8500 DELETED

BASE I2C ADDR: 0X23, WRITE 0X46, READ 0X47

MOTOROLA MOBILITY CONFIDENTIAL RESTRICTED-MDB TRACKED TRACKEDANDBLOCKED

APPROVALS	MOTOROLA MOBILE DEVICES
ENGINEER: MOTOROLA	BLOCK TITLE: audio_fe
LAST MODIFIED BY: MOTOROLA Thu Sep 08 14:13:50 2016	
MOTOROLA CONFIDENTIAL RESTRICTED	B / PROJECT NAME: 84016657001_a.cpm / REV: 03
CAD FILE NAME:	PAGE 73 OF 91

THE DRAWING ON THIS PRINT AND INFORMATION THEREWITH ARE PROPRIETARY TO MOTOROLA AND SHALL NOT BE USED OR DISCUSSED IN WHOLE OR IN PART WITHOUT MOTOROLA'S CONSENT.
© COPYRIGHT, MOTOROLA. THIS DOES NOT IMPLY PUBLICATION

USR: PORTS

REF: 800-999

SUPPLIES

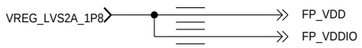

INTERFACES

GPIO - INPUT

GPIO - OUTPUT

APPROVALS	MOTOROLA MOBILE DEVICES
ENGINEER: MOTOROLA	BLOCK TITLE: user_input
LAST MODIFIED BY: MOTOROLA Fri Mar 31 09:12:48 2017	

MOTOROLA CONFIDENTIAL RESTRICTED

THE DRAWING ON THIS PRINT AND INFORMATION THEREWITH ARE PROPRIETARY TO MOTOROLA AND SHALL NOT BE USED OR DISCUSSED IN WHOLE OR IN PART WITHOUT MOTOROLA'S CONSENT.
© COPYRIGHT, MOTOROLA. THIS DOES NOT IMPLY PUBLICATION

B	PROJECT NAME	REV
	84016657001_a.cpm	03
CAD FILE NAME:		PAGE 74 OF 91

USR: INPUT

REF: 800-899

SIDEKEY FLEX CONN

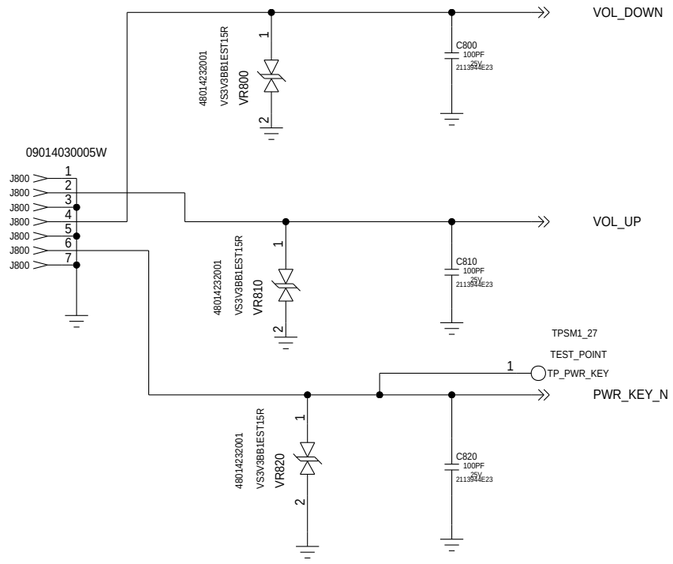

APPROVALS	MOTOROLA MOBILE DEVICES
ENGINEER: MOTOROLA	BLOCK TITLE: user_input
LAST MODIFIED BY: MOTOROLA Fri Mar 31 09:16:37 2017	
MOTOROLA CONFIDENTIAL RESTRICTED	B | PROJECT NAME 84016657001_a.cpm | REV 03
CAD FILE NAME:	PAGE 75 OF 91

THE DRAWING ON THIS PRINT AND INFORMATION THEREWITH ARE PROPRIETARY TO MOTOROLA AND SHALL NOT BE USED OR DISCUSSED IN WHOLE OR IN PART WITHOUT MOTOROLA'S CONSENT.
© COPYRIGHT, MOTOROLA. THIS DOES NOT IMPLY PUBLICATION

USR: FPC

REF: 6600 - 6699

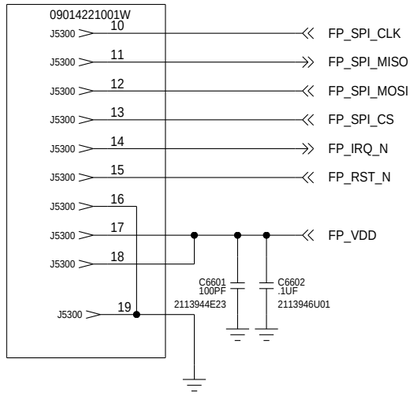

NOTE: FPC CONNECTOR USES PINS FROM THE DISPLAY CONNECTOR.

APPROVALS	MOTOROLA MOBILE DEVICES
ENGINEER: MOTOROLA	BLOCK TITLE: user_input
LAST MODIFIED BY: MOTOROLA Fri Mar 31 09:16:38 2017	
MOTOROLA CONFIDENTIAL RESTRICTED	B | PROJECT NAME 84016657001_a.cpm | REV 03
CAD FILE NAME:	PAGE 76 OF 91

THE DRAWING ON THIS PRINT AND INFORMATION THEREWITH ARE PROPRIETARY TO MOTOROLA AND SHALL NOT BE USED OR DISCUSSED IN WHOLE OR IN PART WITHOUT MOTOROLA'S CONSENT.
© COPYRIGHT, MOTOROLA. THIS DOES NOT IMPLY PUBLICATION

RFFE: BLOCK DIAGRAM

REFDES: 7000-8999

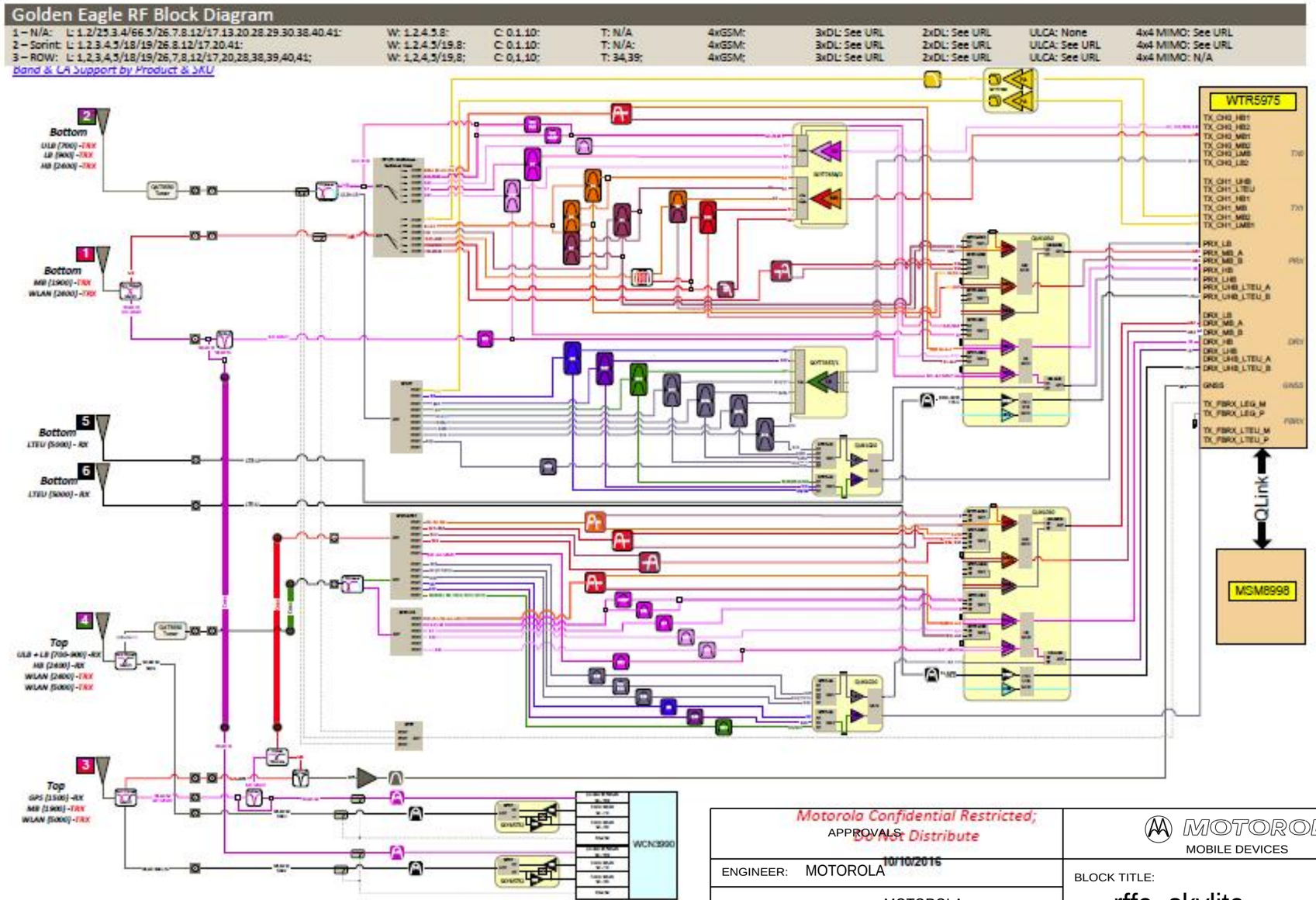

Motorola Confidential Restricted; DO NOT Distribute

APPROVALS

ENGINEER: MOTOROLA 10/10/2016

LAST MODIFIED BY: MOTOROLA

Tue Oct 11 14:26:20 2016

MOTOROLA CONFIDENTIAL RESTRICTED

THE DRAWING ON THIS PRINT AND INFORMATION THEREWITH ARE PROPRIETARY TO MOTOROLA AND SHALL NOT BE USED OR DISCUSSED IN WHOLE OR IN PART WITHOUT MOTOROLA'S CONSENT.
© COPYRIGHT, MOTOROLA. THIS DOES NOT IMPLY PUBLICATION

MOTOROLA MOBILE DEVICES

BLOCK TITLE: rffe_skylite

PROJECT NAME: 84016657001_a.cpm

REV: B 03

CAD FILE NAME:

RFFE: PORTS

REFDES: 7000-8999

POWER

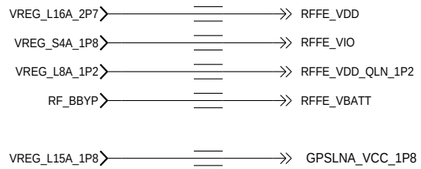

INTERFACES - RFFE MIPI

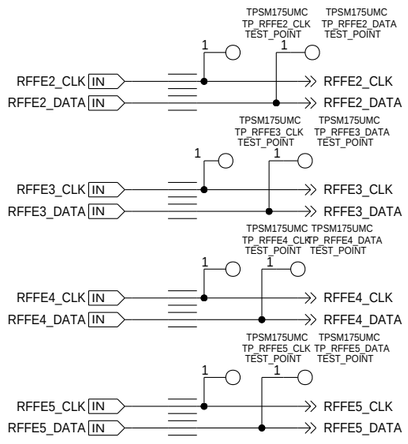

INTERFACES - GRFC

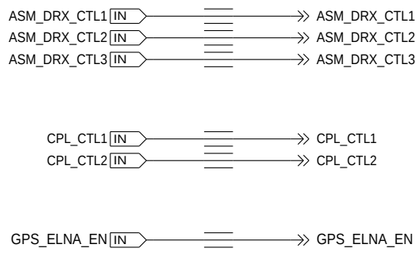

NOTE: GREC7 SHOULD NOT BE ASSIGNED TO RF
IT IS RESERVED AS BOOT_CONFIG CONTROL GPIO

TRANSMITTER - RF

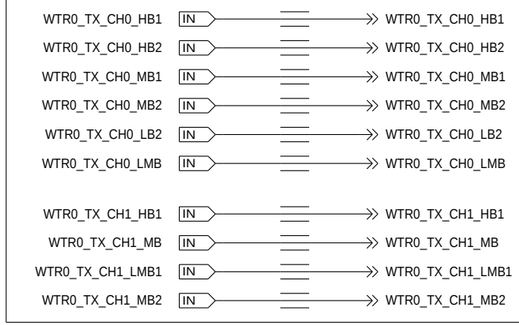

RECEIVER - RF

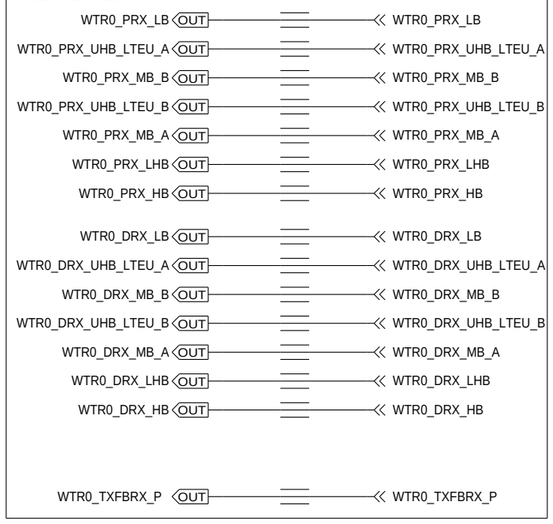

OUTPUTS - RF ANTENNA CONNECTORS

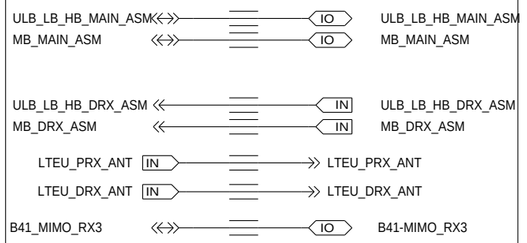

GPS

THERMISTORS

QUALCOMM RECOMMENDS PLCING BOTH THERMISTORS
FOR FUTURE SW IMPLEMENTATION THEY ARE WORKING ON

APPROVALS	MOTOROLA MOBILE DEVICES
ENGINEER: MOTOROLA	BLOCK TITLE: rffe_skylite
LAST MODIFIED BY: MOTOROLA Fri Mar 31 09:16:53 2017	

MOTOROLA CONFIDENTIAL RESTRICTED
THE DRAWING ON THIS PRINT AND INFORMATION THEREWITH ARE PROPRIETARY TO MOTOROLA AND SHALL NOT BE USED OR DISCUSSED IN WHOLE OR IN PART WITHOUT MOTOROLA'S CONSENT.
© COPYRIGHT, MOTOROLA. THIS DOES NOT IMPLY PUBLICATION

B	PROJECT NAME 84016657001_a.cpm	REV 03
	CAD FILE NAME:	PAGE 78 OF 91

RFFE:TRX ASM

REFDES: 7000-7099

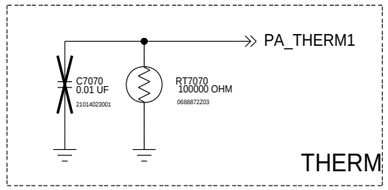

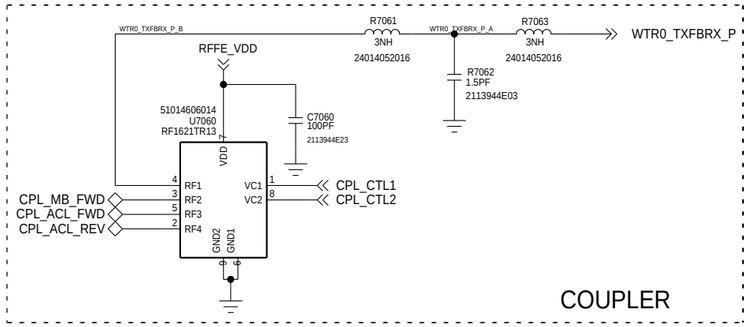

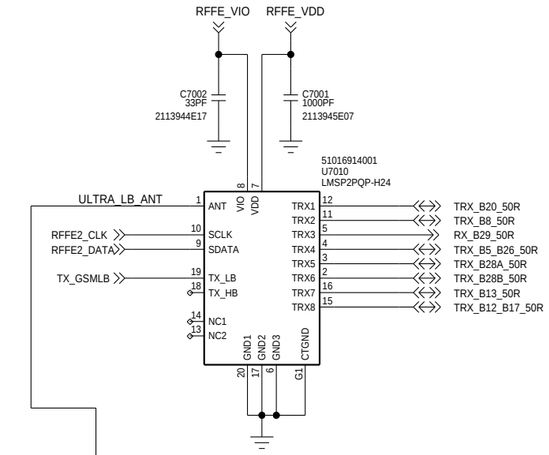

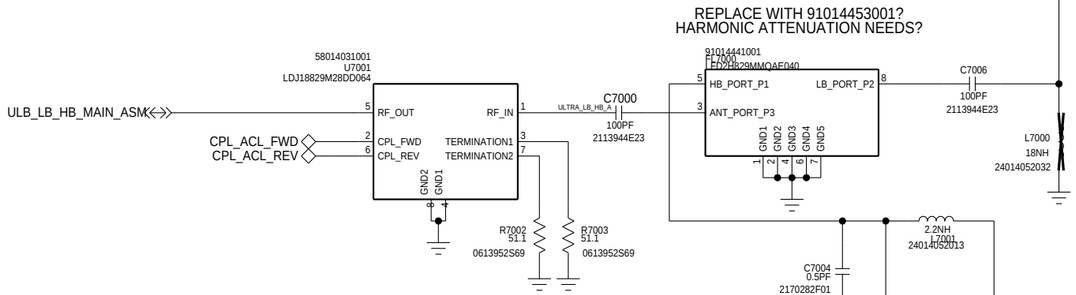

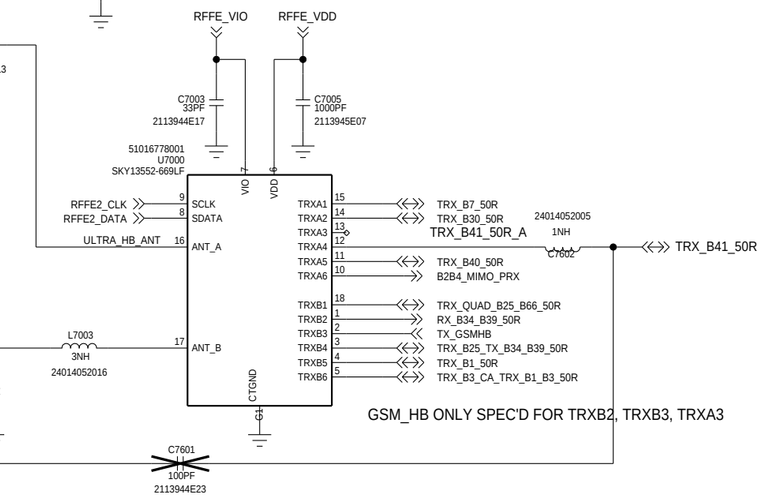

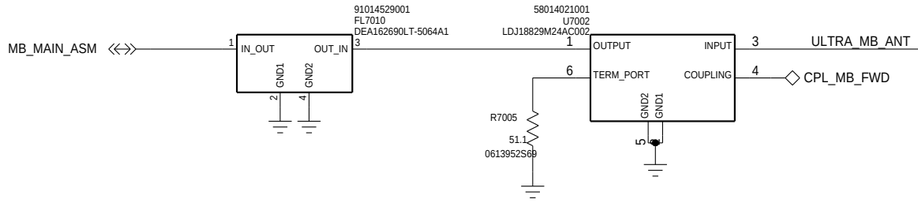

APPROVALS	MOTOROLA MOBILE DEVICES
ENGINEER:	BLOCK TITLE: rffe_skylite
LAST MODIFIED BY: Fri Mar 31 09:16:41 2017	
MOTOROLA CONFIDENTIAL RESTRICTED	B / PROJECT NAME: 84016657001_a.cpm / REV: 03
CAD FILE NAME:	PAGE 79 OF 91

THE DRAWING ON THIS PRINT AND INFORMATION THEREWITH ARE PROPRIETARY TO MOTOROLA AND SHALL NOT BE USED OR DISCUSSED IN WHOLE OR IN PART WITHOUT MOTOROLA'S CONSENT.
© COPYRIGHT, MOTOROLA. THIS DOES NOT IMPLY PUBLICATION

RFFE: SKYLITE PA

REFDES: 7100-7199

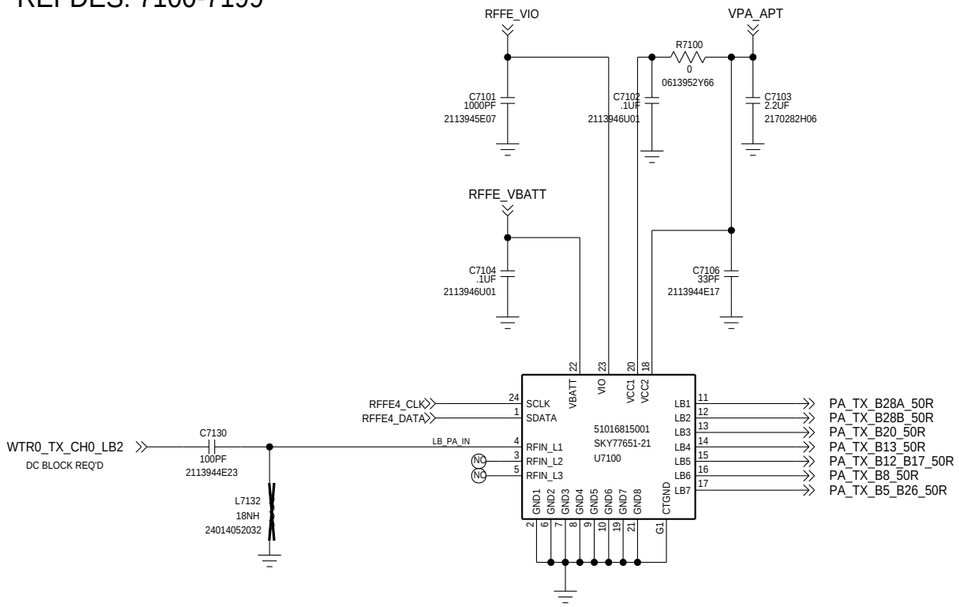

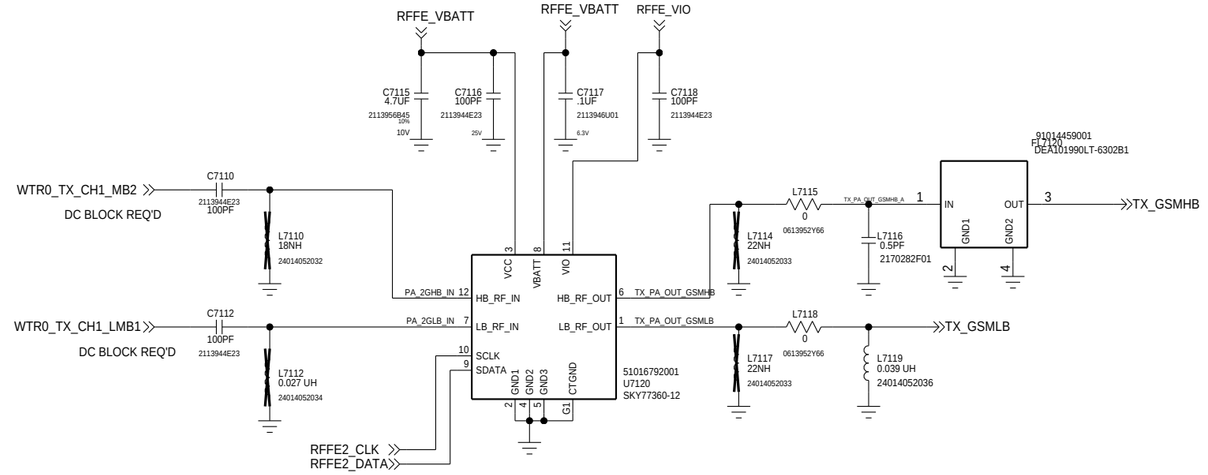

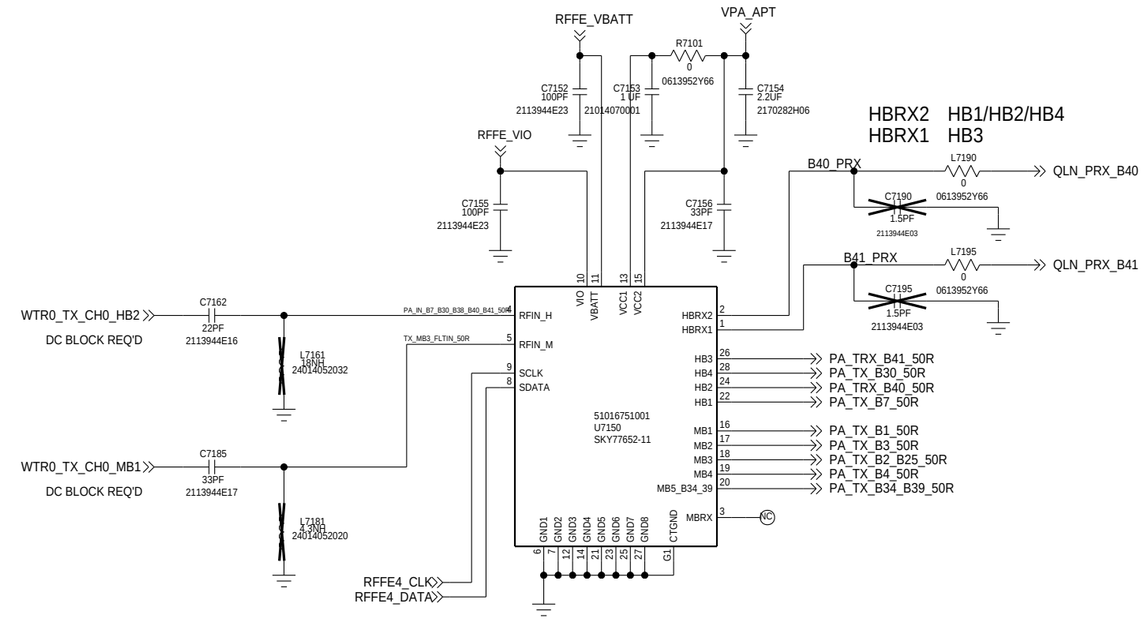

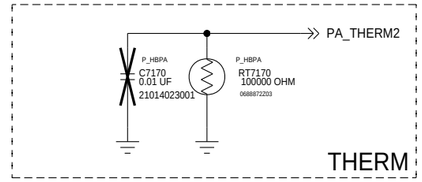

APPROVALS	MOTOROLA MOBILE DEVICES
ENGINEER:	BLOCK TITLE: rffe_skylite
LAST MODIFIED BY: Fri Mar 31 09:16:44 2017	
MOTOROLA CONFIDENTIAL RESTRICTED	PROJECT NAME: B 84016657001_a.cpm — REV: 03
CAD FILE NAME:	PAGE 80 OF 91

THE DRAWING ON THIS PRINT AND INFORMATION THEREWITH ARE PROPRIETARY TO MOTOROLA AND SHALL NOT BE USED OR DISCUSSED IN WHOLE OR IN PART WITHOUT MOTOROLA'S CONSENT.
© COPYRIGHT, MOTOROLA. THIS DOES NOT IMPLY PUBLICATION

RFFE: PRX LB

REF 7200-7299

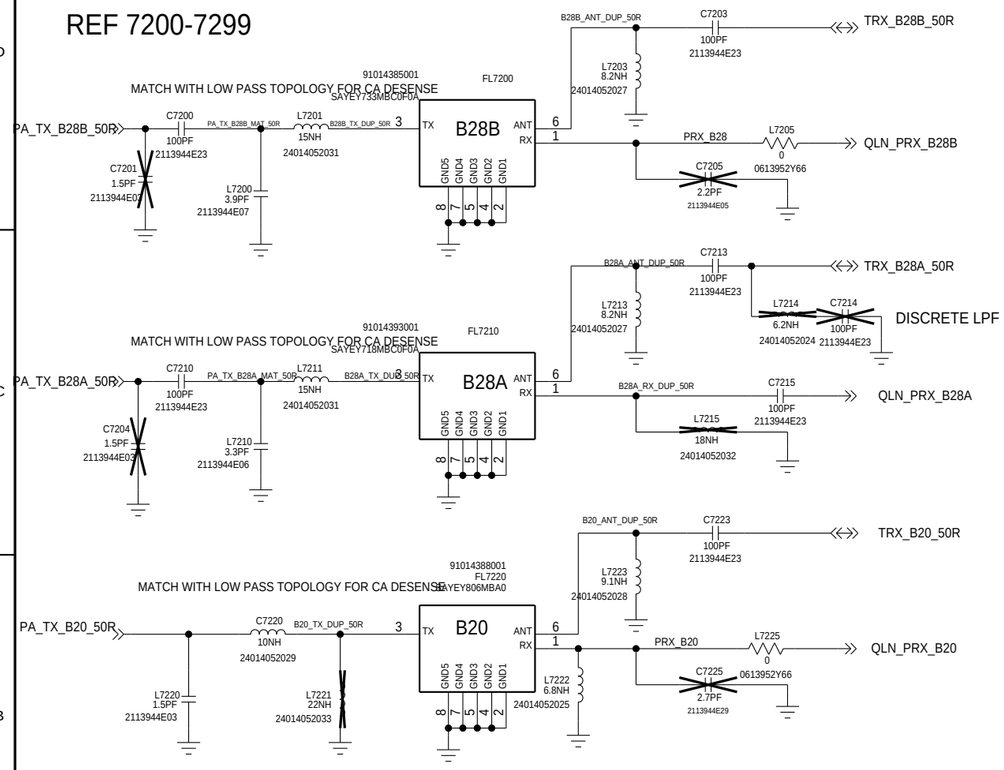

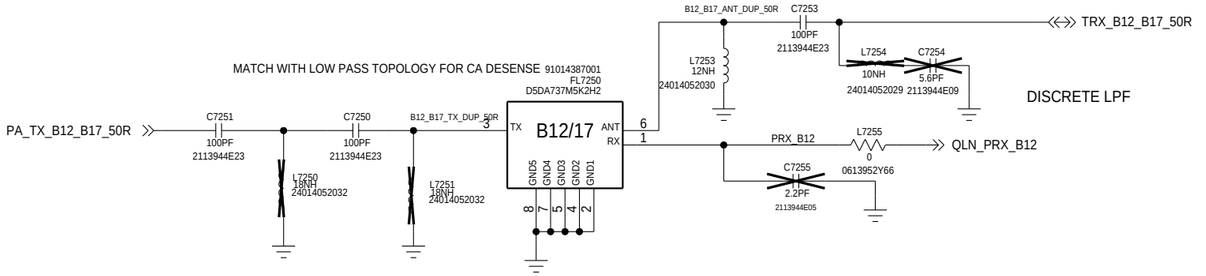

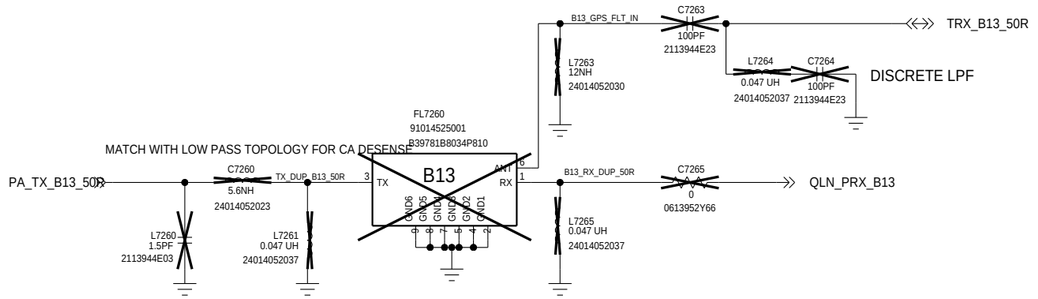

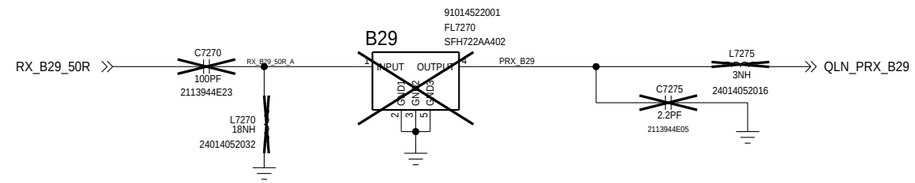

APPROVALS	MOTOROLA MOBILE DEVICES
ENGINEER:	BLOCK TITLE: rffe_skylite
LAST MODIFIED BY: Fri Mar 31 09:16:39 2017	
MOTOROLA CONFIDENTIAL RESTRICTED THE DRAWING ON THIS PRINT AND INFORMATION THEREWITH ARE PROPRIETARY TO MOTOROLA AND SHALL NOT BE USED OR DISCUSSED IN WHOLE OR IN PART WITHOUT MOTOROLA'S CONSENT. © COPYRIGHT, MOTOROLA. THIS DOES NOT IMPLY PUBLICATION	B — PROJECT NAME: 84016657001_a.cpm — REV: 03 CAD FILE NAME: — PAGE 81 OF 91

RFFE: PRX MB

REF 7300-7399

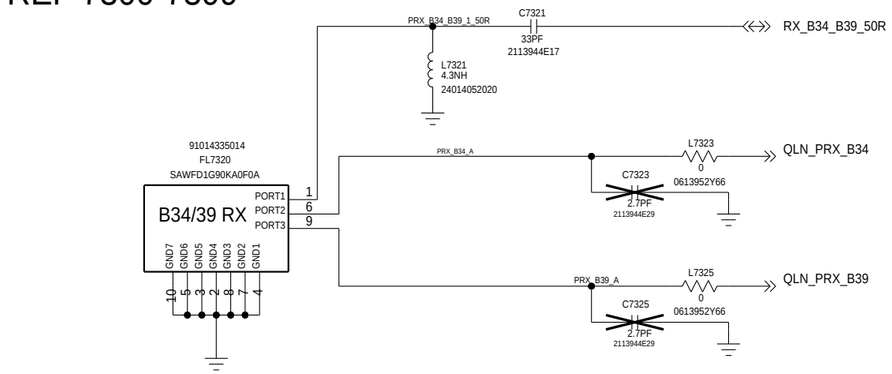

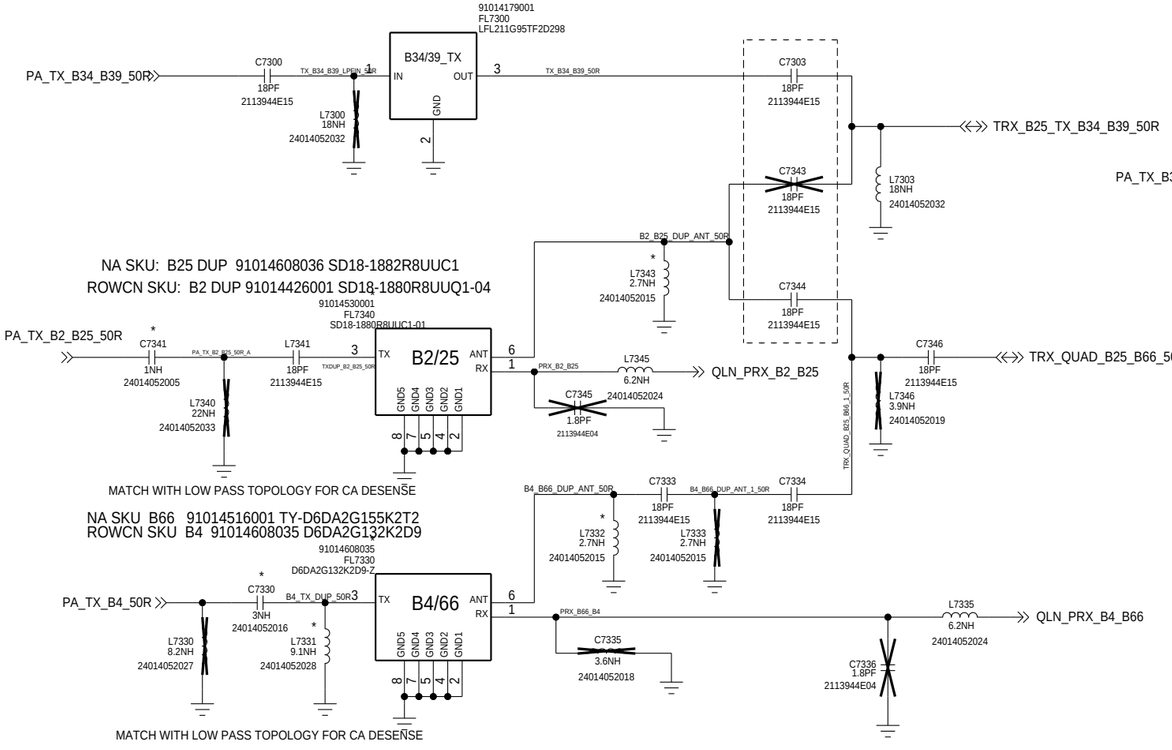

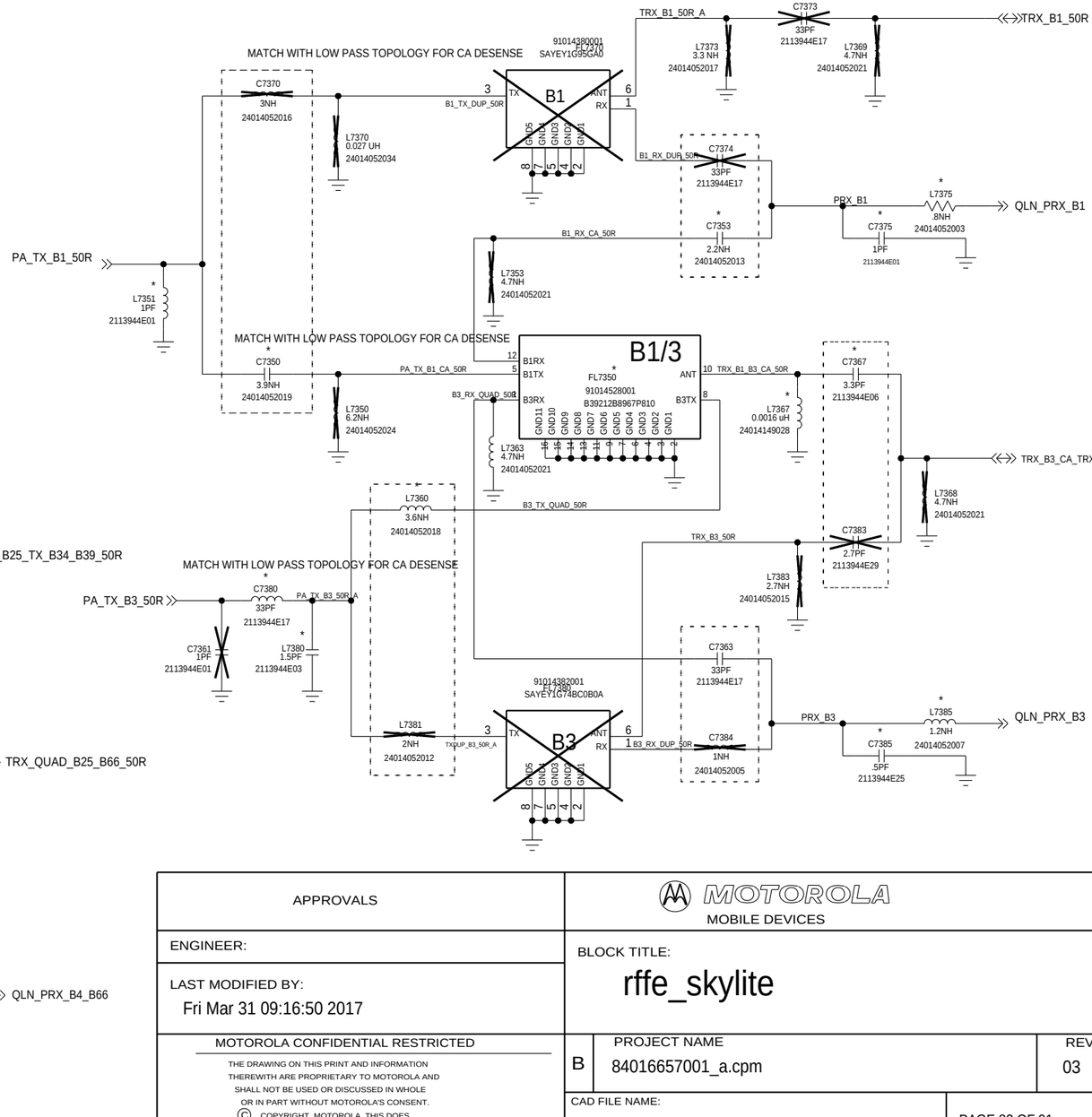

APPROVALS	MOTOROLA MOBILE DEVICES
ENGINEER:	BLOCK TITLE: rffe_skylite
LAST MODIFIED BY: Fri Mar 31 09:16:50 2017	
MOTOROLA CONFIDENTIAL RESTRICTED	PROJECT NAME: B 84016657001_a.cpm — REV: 03
CAD FILE NAME:	PAGE 82 OF 91

THE DRAWING ON THIS PRINT AND INFORMATION THEREWITH ARE PROPRIETARY TO MOTOROLA AND SHALL NOT BE USED OR DISCUSSED IN WHOLE OR IN PART WITHOUT MOTOROLA'S CONSENT.
© COPYRIGHT, MOTOROLA. THIS DOES NOT IMPLY PUBLICATION

RFFE: PRX HB

REF 7400-7499

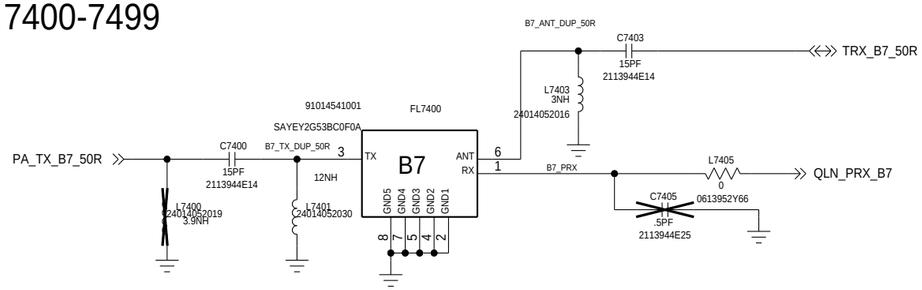

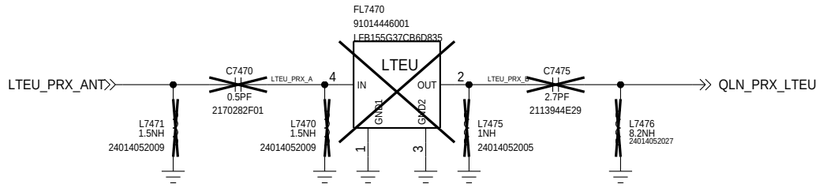

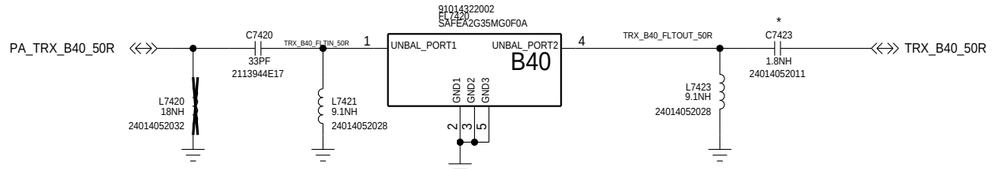

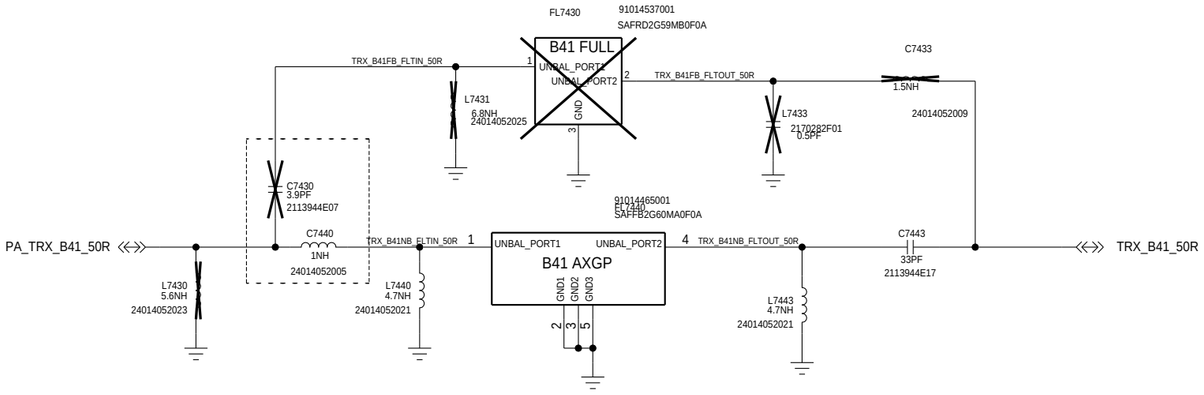

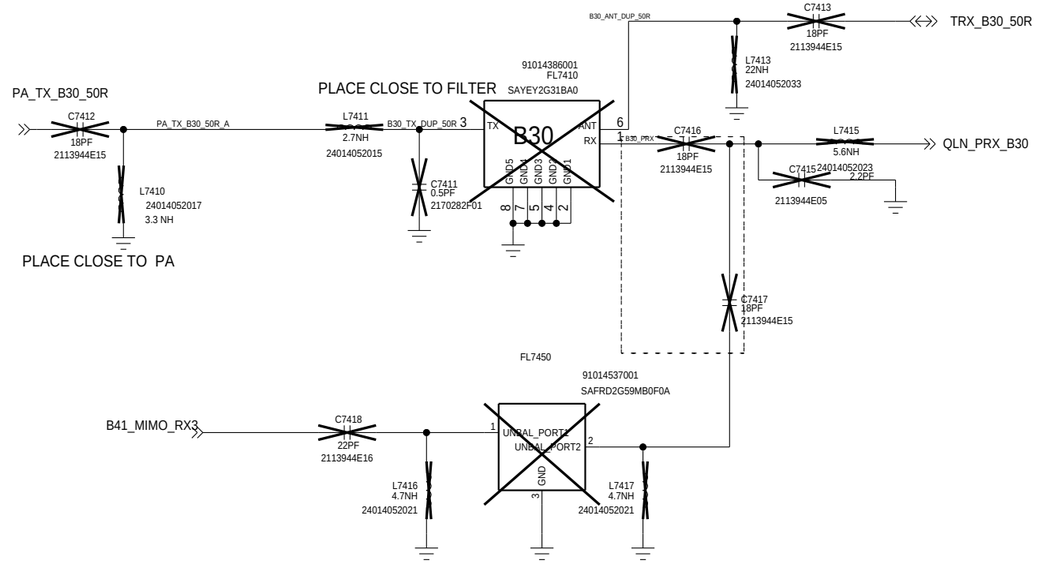

APPROVALS		MOTOROLA MOBILE DEVICES					
ENGINEER:		BLOCK TITLE: rffe_skylite					
LAST MODIFIED BY: Fri Mar 31 09:16:46 2017							
MOTOROLA CONFIDENTIAL RESTRICTED THE DRAWING ON THIS PRINT AND INFORMATION THEREWITH ARE PROPRIETARY TO MOTOROLA AND SHALL NOT BE USED OR DISCUSSED IN WHOLE OR IN PART WITHOUT MOTOROLA'S CONSENT. © COPYRIGHT, MOTOROLA. THIS DOES NOT IMPLY PUBLICATION		B	PROJECT NAME: 84016657001_a.cpm			REV: 03	
		CAD FILE NAME:				PAGE 83 OF 91	

RFFE: DRX ASM

REF 7500-7599

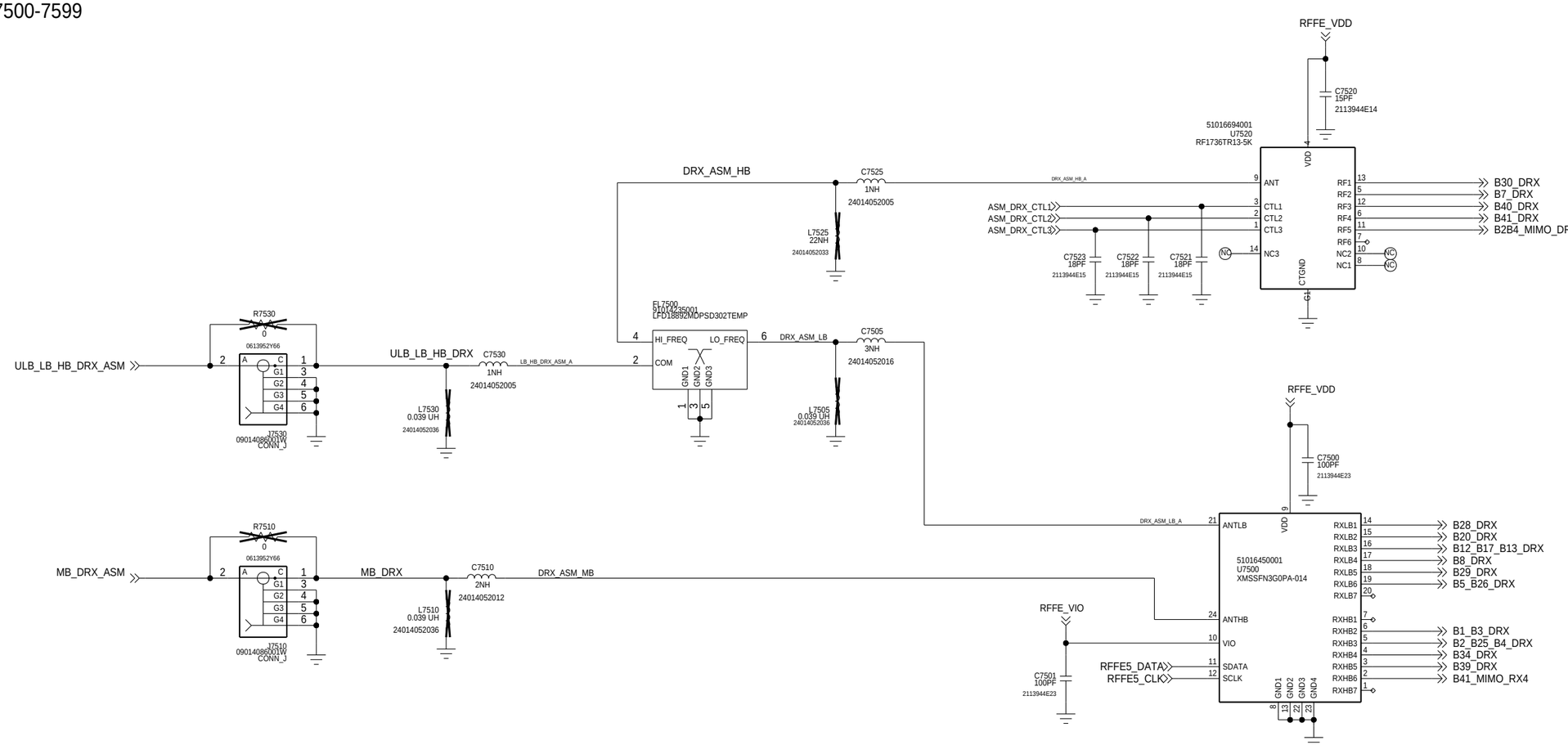

APPROVALS	MOTOROLA MOBILE DEVICES
ENGINEER: MOTOROLA	BLOCK TITLE: rffe_skylite
LAST MODIFIED BY: MOTOROLA Fri Mar 31 09:16:52 2017	
MOTOROLA CONFIDENTIAL RESTRICTED	B — PROJECT NAME 84716657001_a.cpm — REV 01
	CAD FILE NAME: — PAGE 84 OF 91

THE DRAWING ON THIS PRINT AND INFORMATION THEREWITH ARE PROPRIETARY TO MOTOROLA AND SHALL NOT BE USED OR DISCUSSED IN WHOLE OR IN PART WITHOUT MOTOROLA'S CONSENT.
© COPYRIGHT, MOTOROLA. THIS DOES NOT IMPLY PUBLICATION

RFFE: DRX LB

REF : 7700-7799

LB DIVERSITY

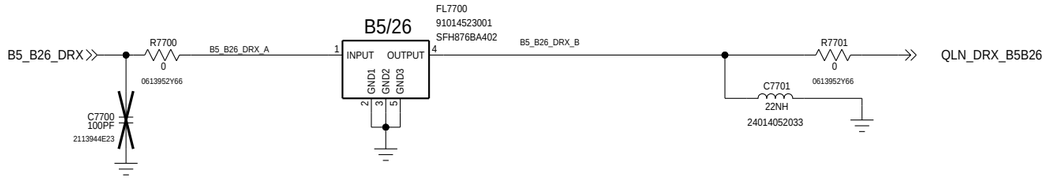

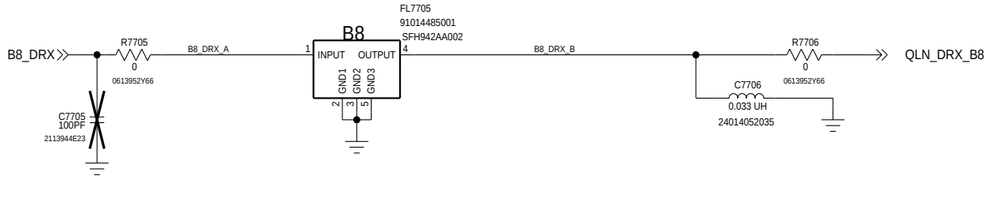

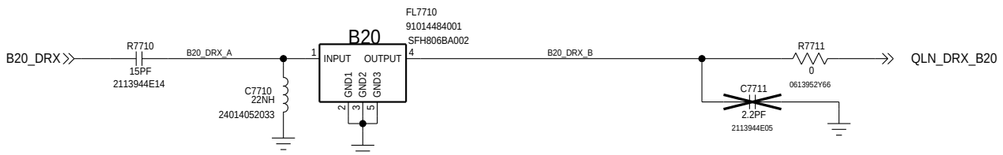

ULB DIVERSITY

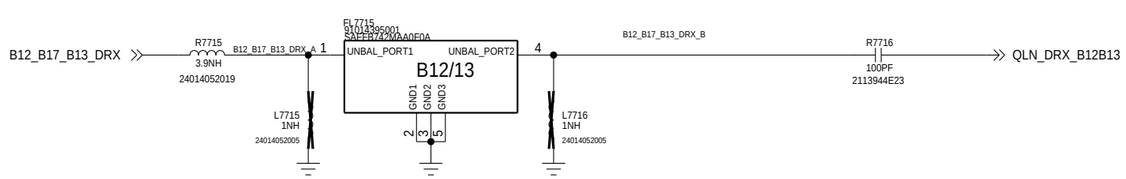

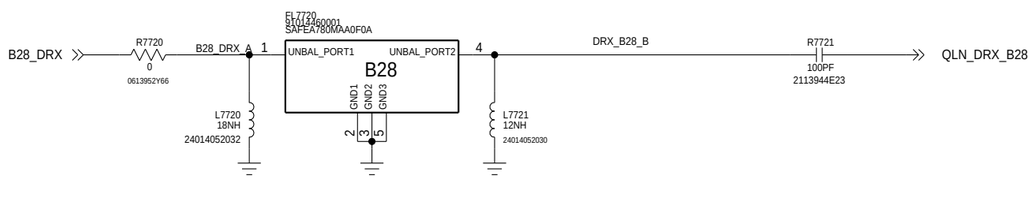

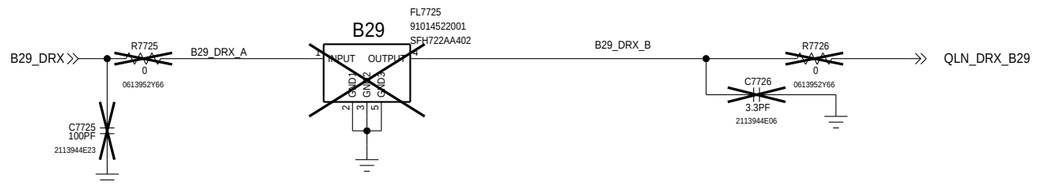

APPROVALS	MOTOROLA MOBILE DEVICES
ENGINEER: MOTOROLA	BLOCK TITLE: rffe_skylite
LAST MODIFIED BY: MOTOROLA Fri Mar 31 09:16:52 2017	
MOTOROLA CONFIDENTIAL RESTRICTED THE DRAWING ON THIS PRINT AND INFORMATION THEREWITH ARE PROPRIETARY TO MOTOROLA AND SHALL NOT BE USED OR DISCUSSED IN WHOLE OR IN PART WITHOUT MOTOROLA'S CONSENT. © COPYRIGHT, MOTOROLA. THIS DOES NOT IMPLY PUBLICATION	B PROJECT NAME 8974067001_a.cpm REV 03 CAD FILE NAME: PAGE 85 OF 91

8974067001_a.cpm

RFFE: DRX MB

REF 7600-7699

MB DIVERSITY

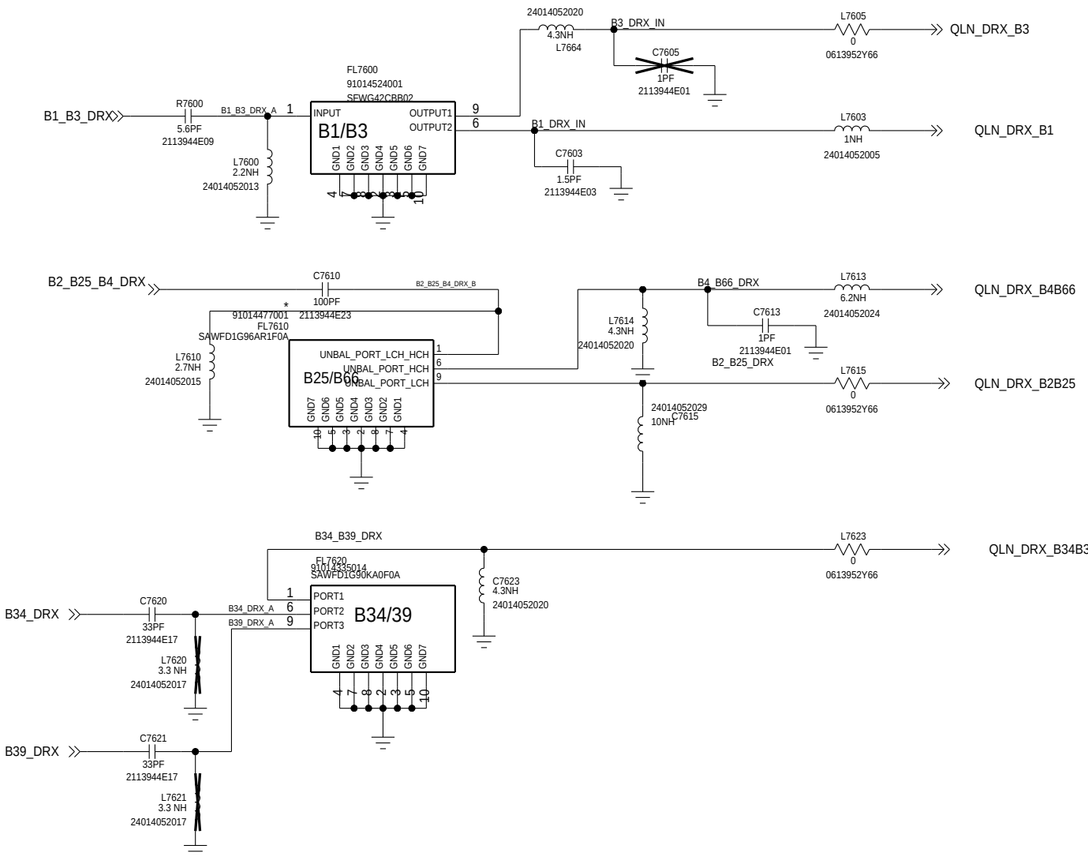

MB 4X4 MIMO

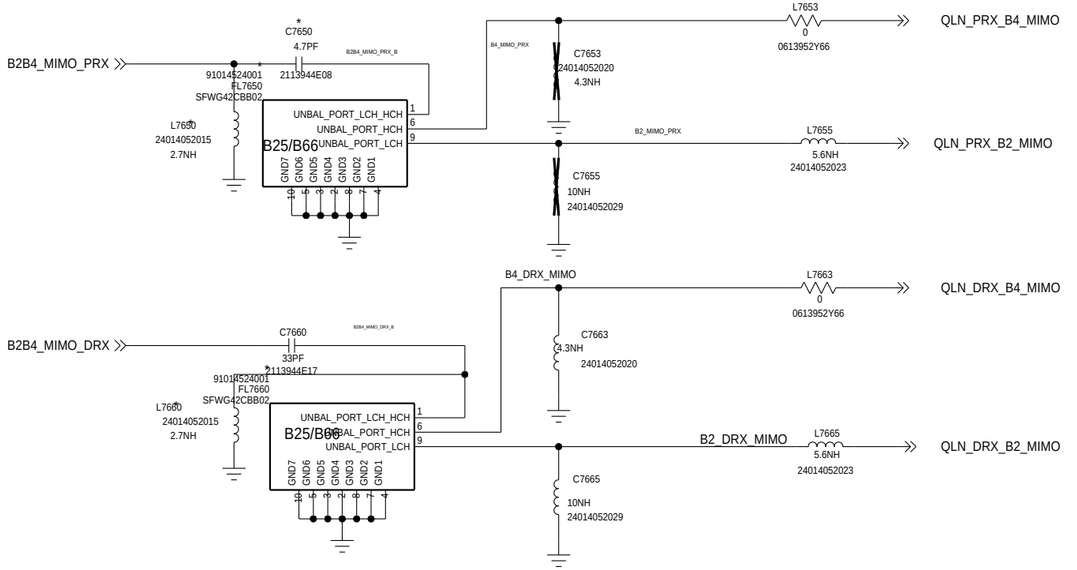

APPROVALS	MOTOROLA MOBILE DEVICES
ENGINEER: MOTOROLA	BLOCK TITLE: rffe_skylite
LAST MODIFIED BY: MOTOROLA Fri Mar 31 09:16:47 2017	
MOTOROLA CONFIDENTIAL RESTRICTED	B PROJECT NAME 8974665001_a.cpm REV 03
THE DRAWING ON THIS PRINT AND INFORMATION THEREWITH ARE PROPRIETARY TO MOTOROLA AND SHALL NOT BE USED OR DISCUSSED IN WHOLE OR IN PART WITHOUT MOTOROLA'S CONSENT. © COPYRIGHT, MOTOROLA. THIS DOES NOT IMPLY PUBLICATION	CAD FILE NAME: PAGE 86 OF 91

RFFE: DRX HB

REF 7800-7899

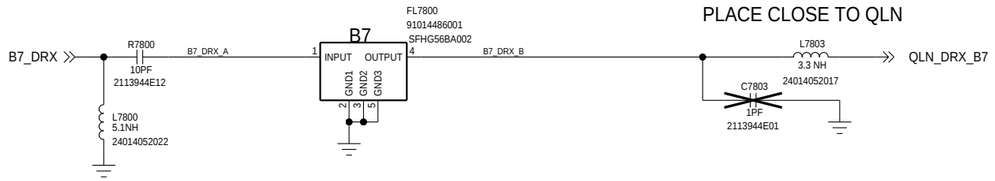

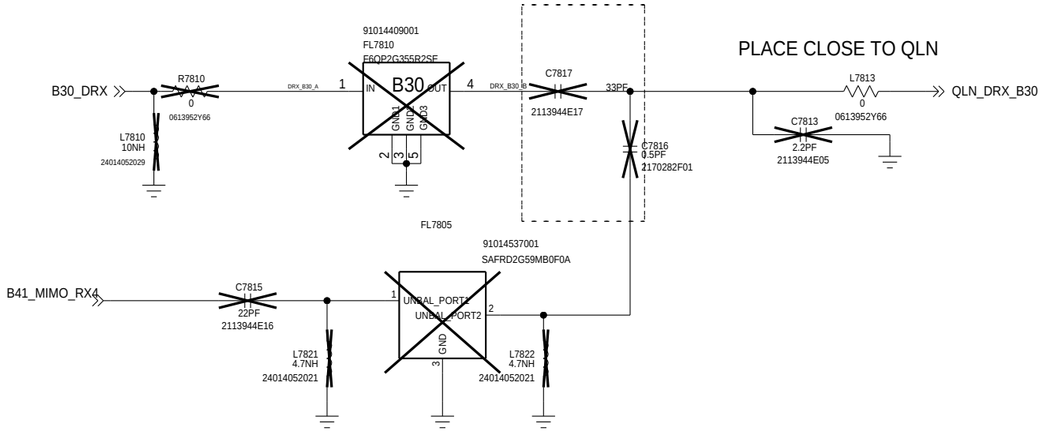

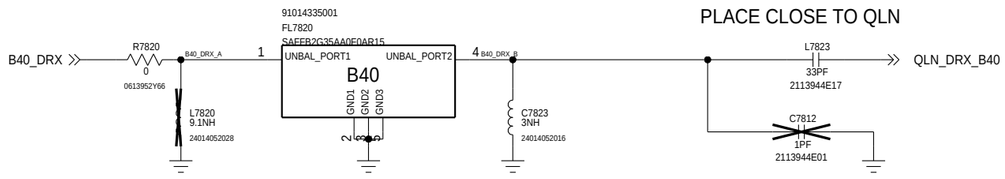

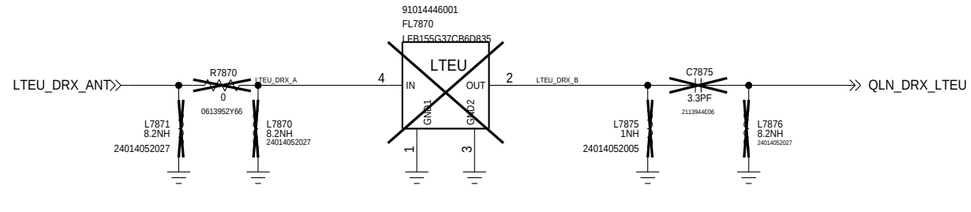

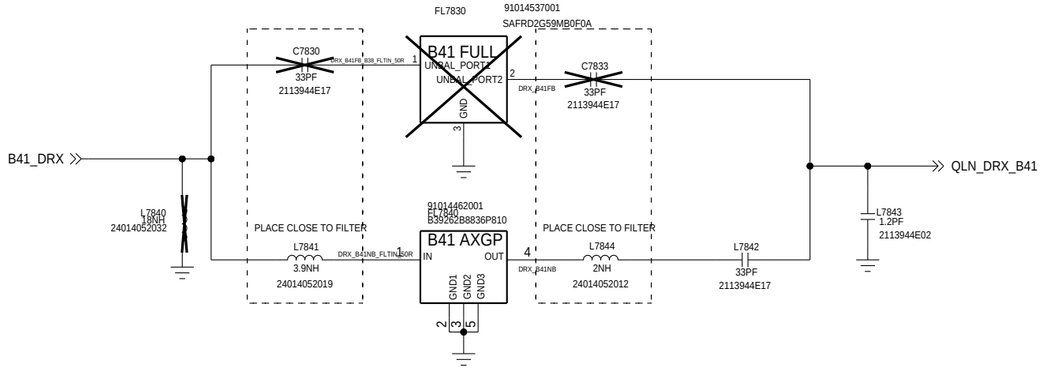

APPROVALS	MOTOROLA MOBILE DEVICES
ENGINEER: MOTOROLA	BLOCK TITLE: rffe_skylite
LAST MODIFIED BY: MOTOROLA Fri Mar 31 09:16:45 2017	
MOTOROLA CONFIDENTIAL RESTRICTED	PROJECT NAME 8974066701_a.cpm / 8974066701_a.cpm / 8974066701_a.cpm /

RFFE: PRX LNA

REF 8000-8099

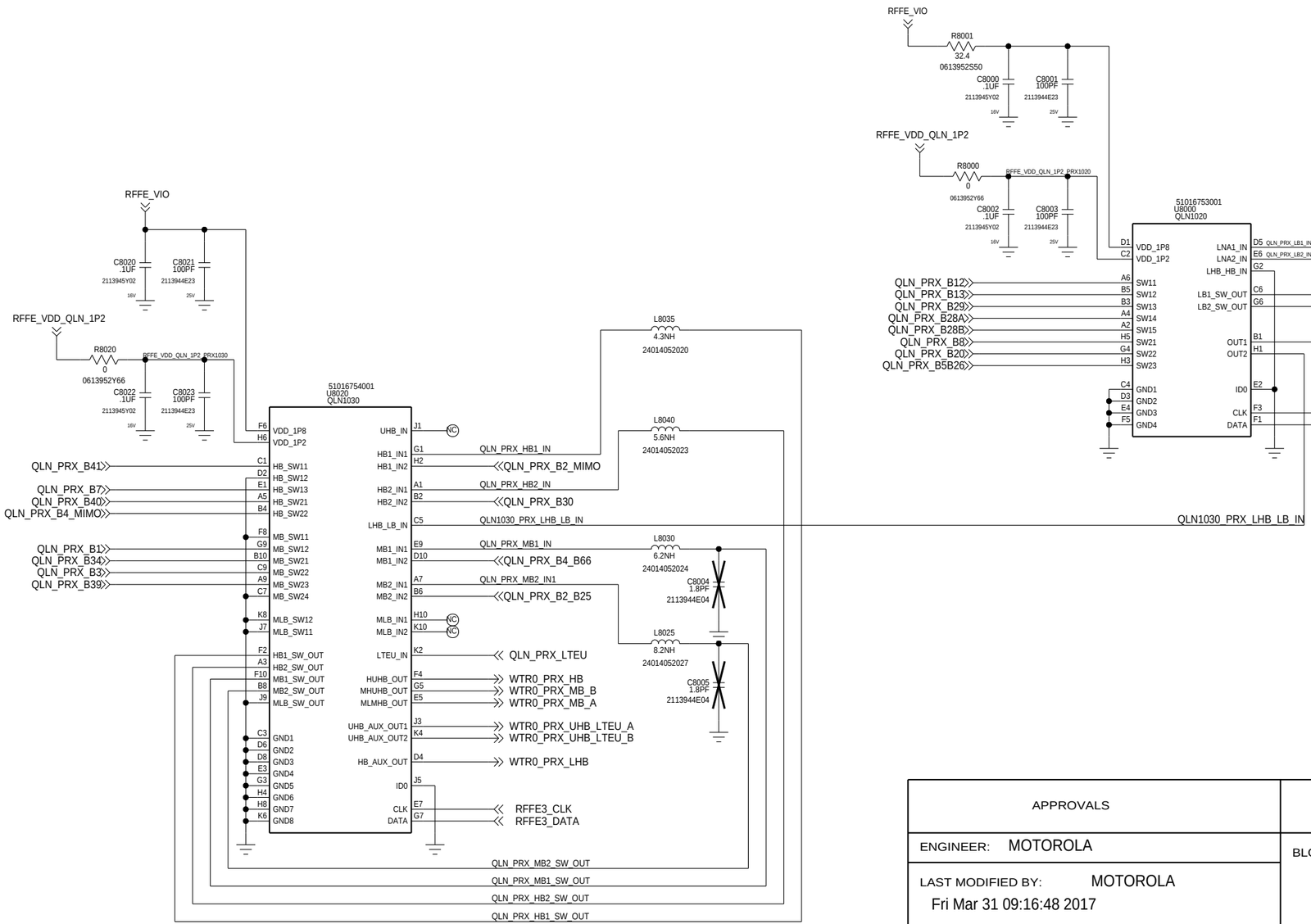

APPROVALS	MOTOROLA MOBILE DEVICES
ENGINEER: MOTOROLA	BLOCK TITLE: rffe_skylite
LAST MODIFIED BY: MOTOROLA Fri Mar 31 09:16:48 2017	
MOTOROLA CONFIDENTIAL RESTRICTED	PROJECT NAME: B 84016657001_a.cpm REV: 03
THE DRAWING ON THIS PRINT AND INFORMATION THEREWITH ARE PROPRIETARY TO MOTOROLA AND SHALL NOT BE USED OR DISCUSSED IN WHOLE OR IN PART WITHOUT MOTOROLA'S CONSENT. © COPYRIGHT, MOTOROLA. THIS DOES NOT IMPLY PUBLICATION	CAD FILE NAME: PAGE 88 OF 91

RFFE: DRX LNA

REF 8100-8199

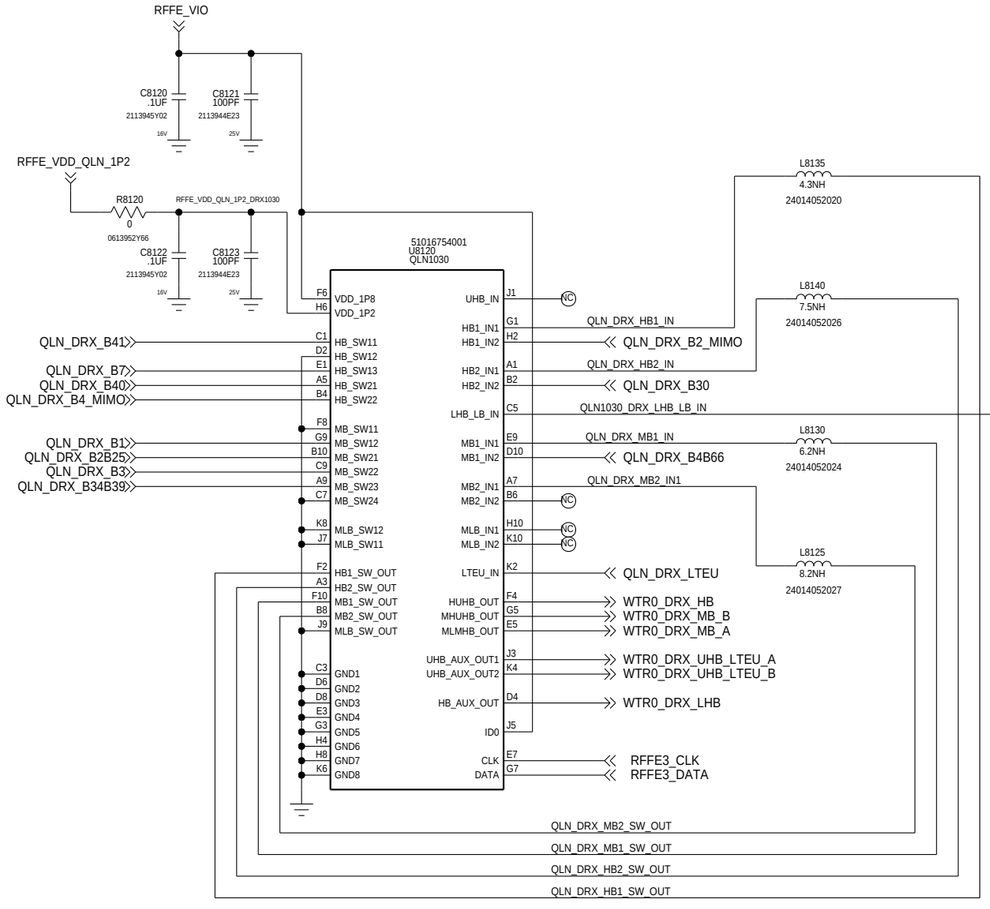

APPROVALS	MOTOROLA MOBILE DEVICES
ENGINEER: MOTOROLA	BLOCK TITLE: rffe_skylite
LAST MODIFIED BY: MOTOROLA Fri Mar 31 09:16:49 2017	
MOTOROLA CONFIDENTIAL RESTRICTED	B PROJECT NAME 84016657001_a.cpm REV 03
CAD FILE NAME:	PAGE 89 OF 91

THE DRAWING ON THIS PRINT AND INFORMATION THEREWITH ARE PROPRIETARY TO MOTOROLA AND SHALL NOT BE USED OR DISCUSSED IN WHOLE OR IN PART WITHOUT MOTOROLA'S CONSENT.
© COPYRIGHT, MOTOROLA. THIS DOES NOT IMPLY PUBLICATION

RFFE: QFE2101

REFDES: 8200-8299

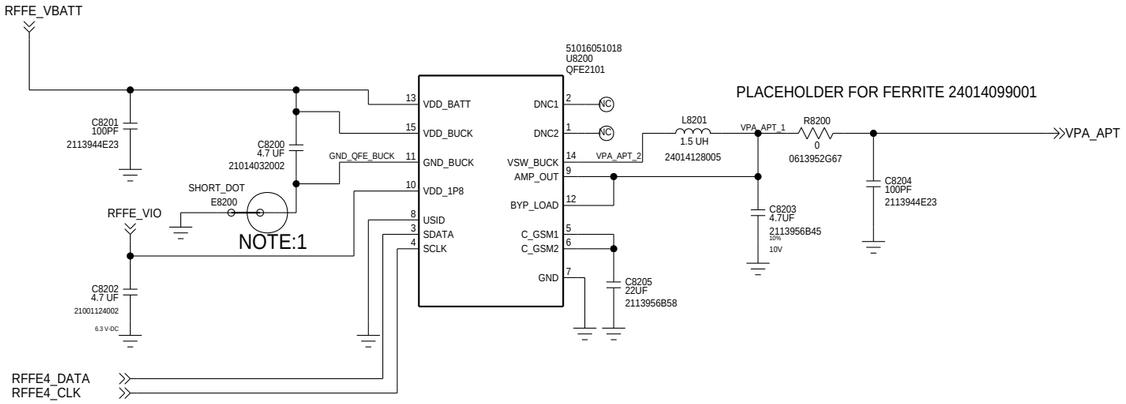

DO NOT VIA DIRECTLY TO GROUND PLANE. KEEP ISOLATED ON SURFACE LAYER;

APPROVALS	MOTOROLA MOBILE DEVICES
ENGINEER:	BLOCK TITLE: rffe_skylite
LAST MODIFIED BY: Fri Mar 31 09:16:43 2017	
MOTOROLA CONFIDENTIAL RESTRICTED THE DRAWING ON THIS PRINT AND INFORMATION THEREWITH ARE PROPRIETARY TO MOTOROLA AND SHALL NOT BE USED OR DISCUSSED IN WHOLE OR IN PART WITHOUT MOTOROLA'S CONSENT. © COPYRIGHT, MOTOROLA. THIS DOES NOT IMPLY PUBLICATION	B | PROJECT NAME: 84016657001_a.cpm | REV: 03
CAD FILE NAME:	PAGE 90 OF 91

RFFE: GPS

REF 8500-8599

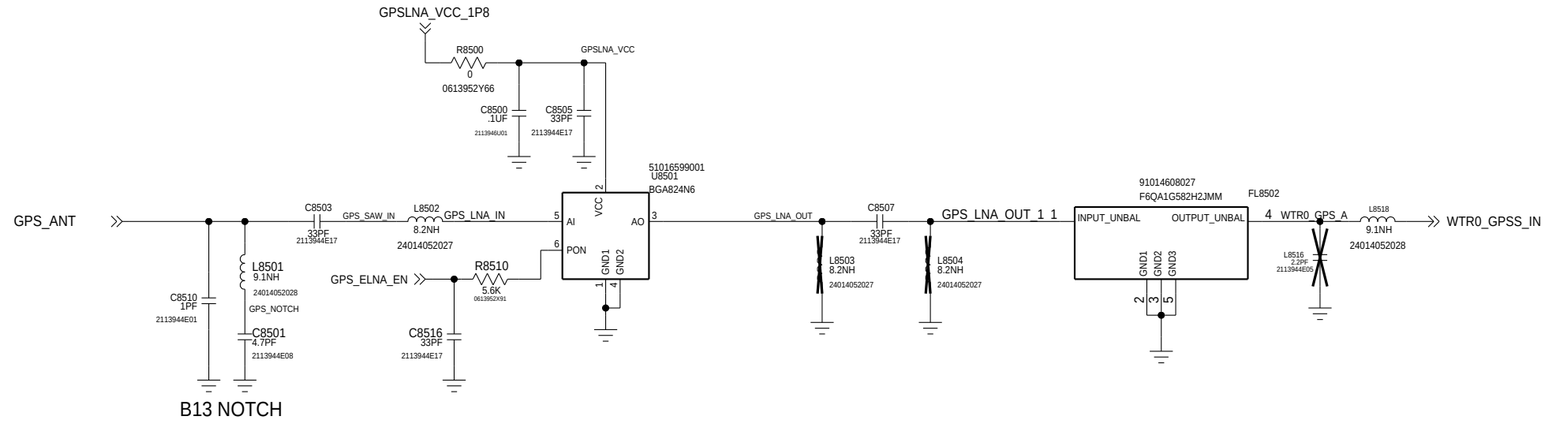

APPROVALS	MOTOROLA MOBILE DEVICES
ENGINEER:	BLOCK TITLE: rffe_skylite
LAST MODIFIED BY: Fri Mar 31 09:16:42 2017	
MOTOROLA CONFIDENTIAL RESTRICTED	B / PROJECT NAME: 84016657001_a.cpm / REV: 03
CAD FILE NAME:	PAGE 91 OF 91

THE DRAWING ON THIS PRINT AND INFORMATION THEREWITH ARE PROPRIETARY TO MOTOROLA AND SHALL NOT BE USED OR DISCUSSED IN WHOLE OR IN PART WITHOUT MOTOROLA'S CONSENT.
© COPYRIGHT, MOTORola. THIS DOES NOT IMPLY PUBLICATION