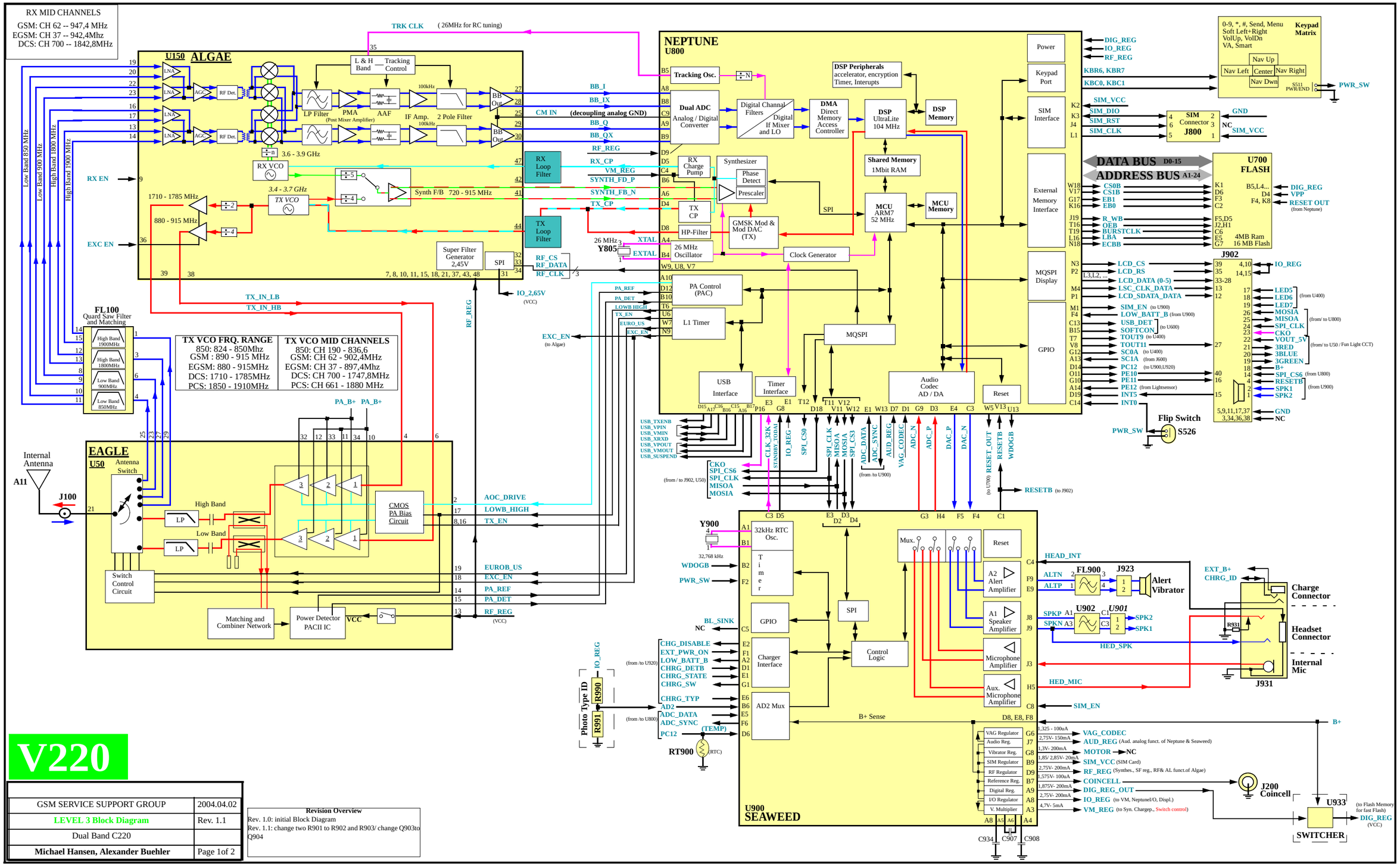

V220

GSM SERVICE SUPPORT GROUP	2004.04.02
LEVEL 3 Block Diagram	Rev. 1.1
Dual Band C220	
Michael Hansen, Alexander Buehler	Page 1of 2

Revision Overview

Rev. 1.0: initial Block Diagram
Rev. 1.1: change two R901 to R902 and R903/ change Q903to Q904

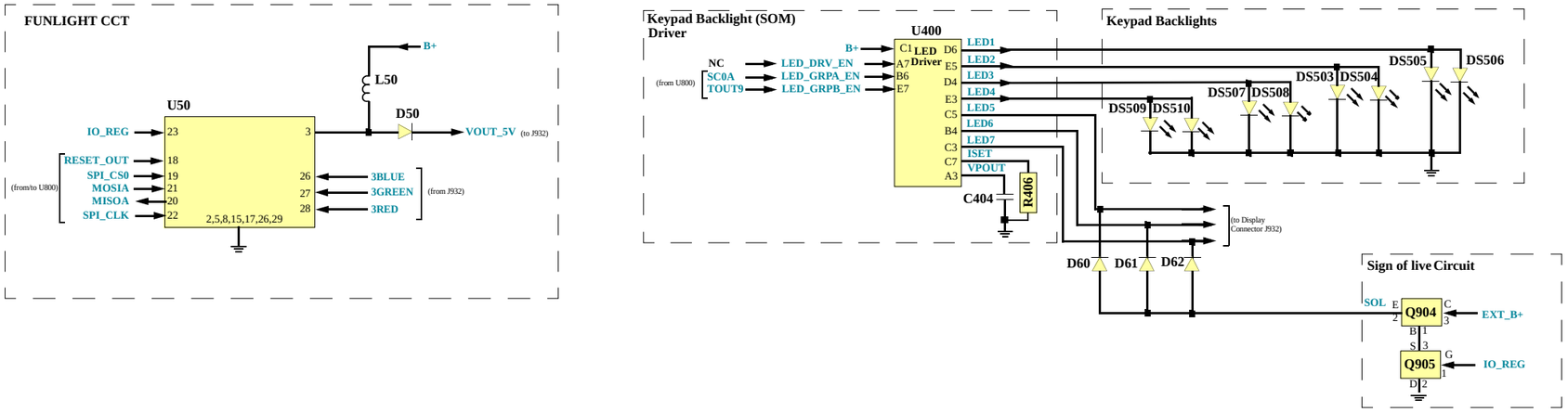

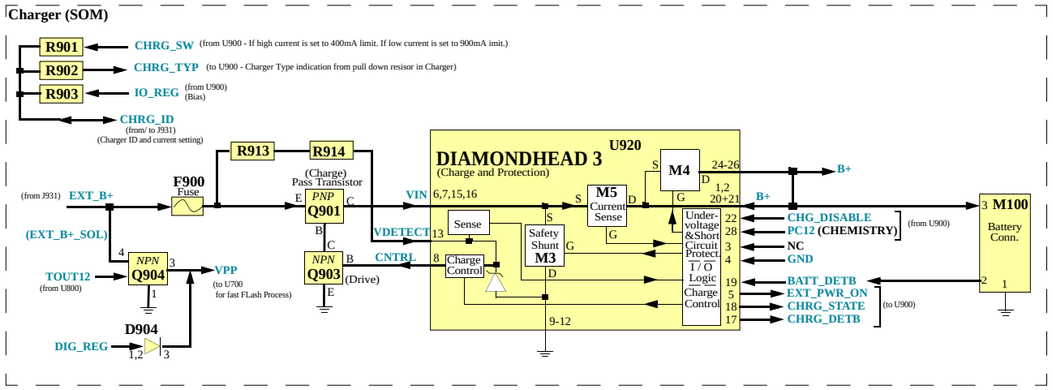

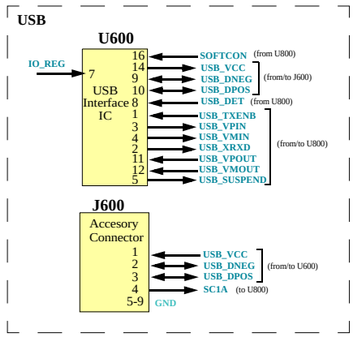

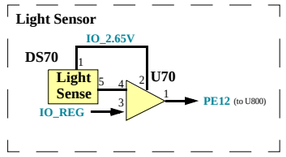

V220

GSM SERVICE SUPPORT GROUP	2004.04.02
LEVEL 3 Block Diagram	Rev. 1.1
Dual Band C220	
Michael Hansen, Alexander Buehler	Page 2of 2

Revision Overview

Rev. 1.0: initial Block Diagram
Rev. 1.1: change two R901 to R902 and R903/ change Q903to Q904