E1000: RF Block Diagram (Rev 1.2) PCB: 8489659N07 Iss P7C_O

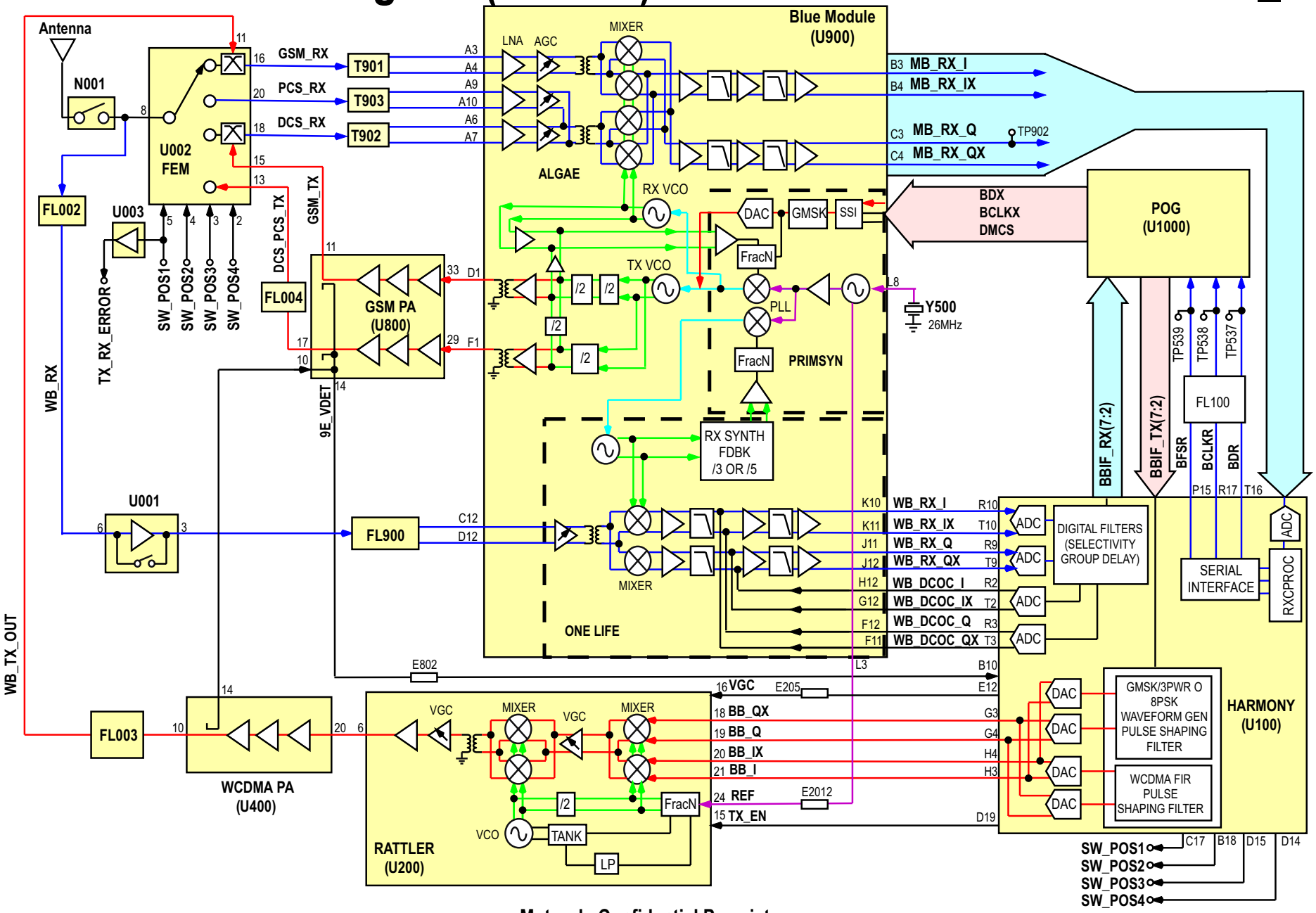

Motorola Confidential Proprietary