Lower Board Schematic

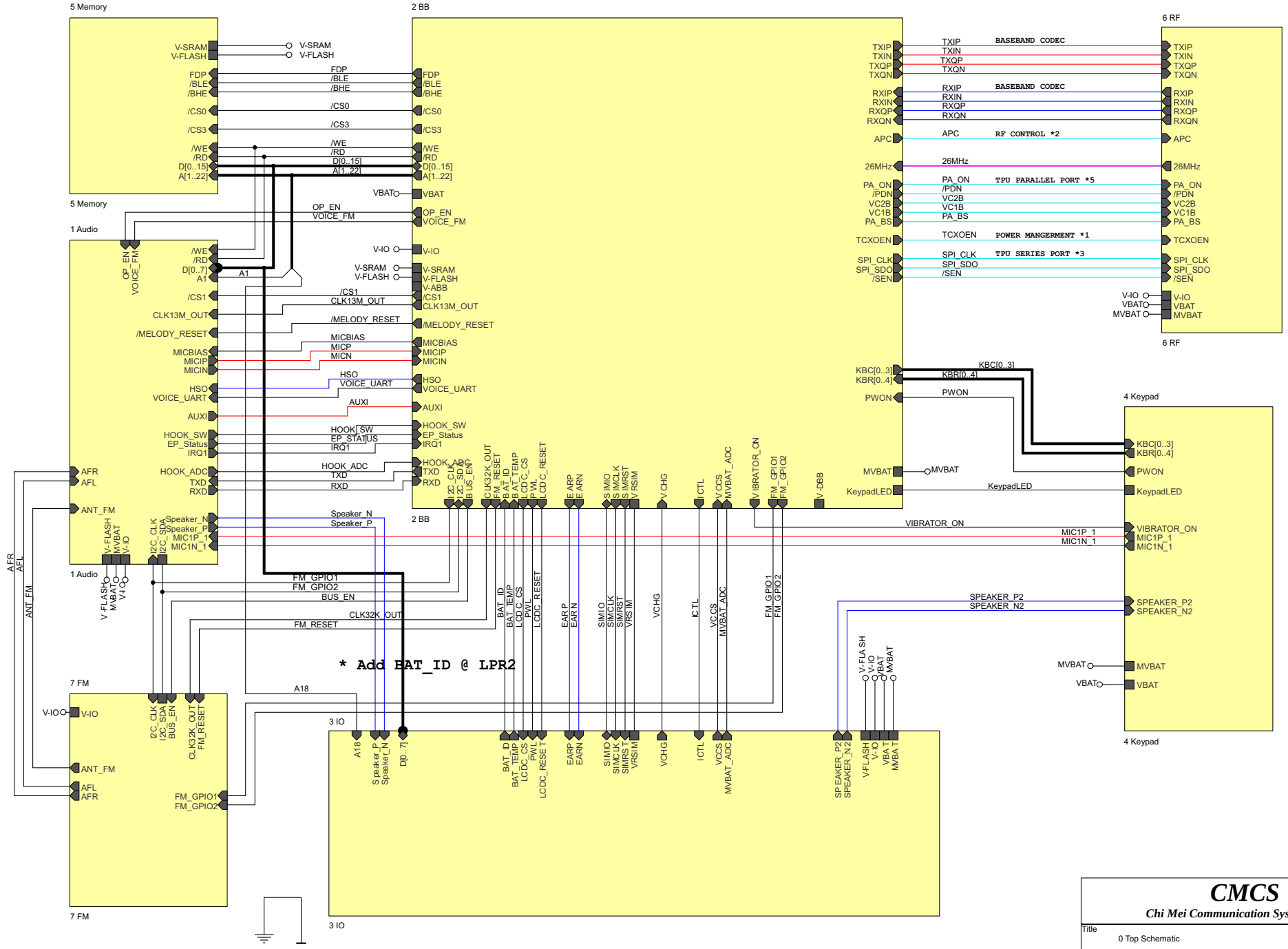

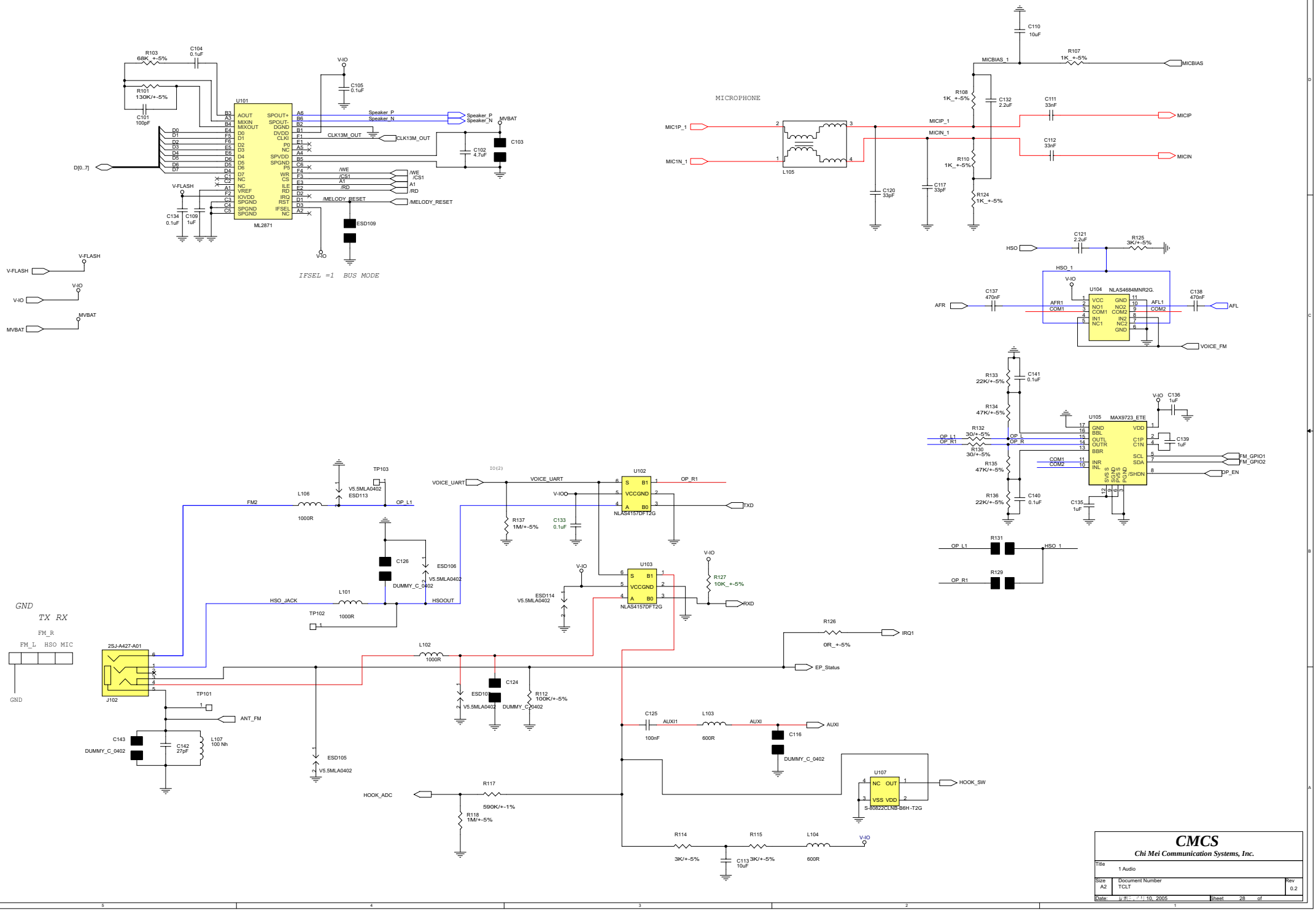

CMCS		
Chi Mei Communication Systems, Inc.		
Title: 1 Audio		
Size: A2	Document Number: TCLT	Rev: 0.2
Date: [illegible] 10, 2005	Sheet 28 of	

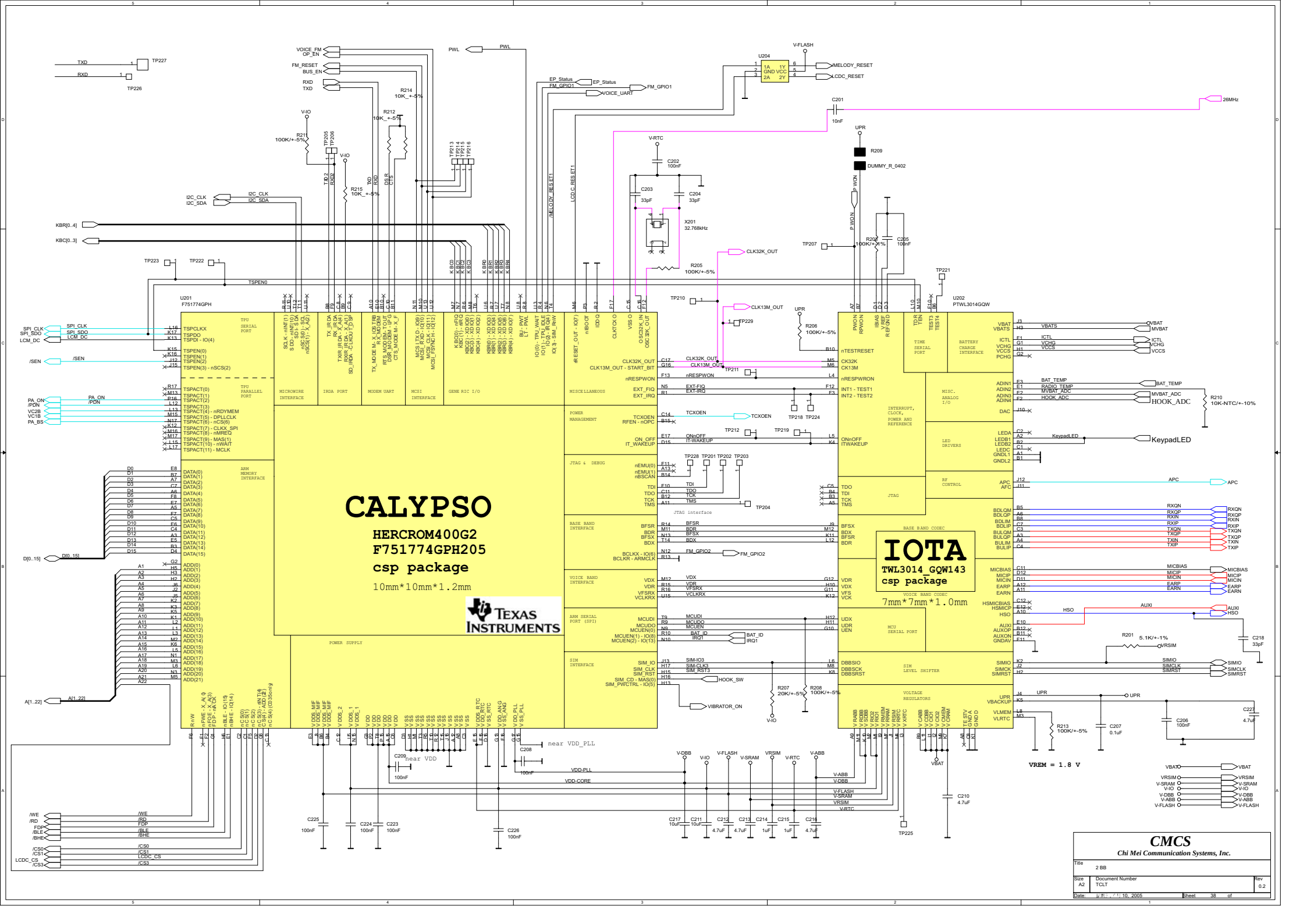
CALYPSO
HERCROM400G2
F751774GPH205
csp package
10mm*10mm*1.2mm
IOTA
TWL3014_GQW143
csp package
7mm*7mm*1.0mm
U201
F751774GPH
U202
PTWL3014GQW
VREM = 1.8 V
CMCS
Chi Mei Communication Systems, Inc.
Title
2 BB
Size
A2
Document Number
TCLT
Rev
0.2
Sheet
38
of

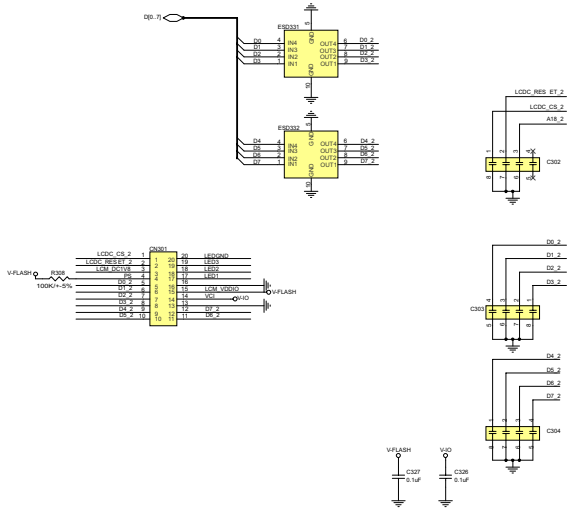

LCM INTERFACE

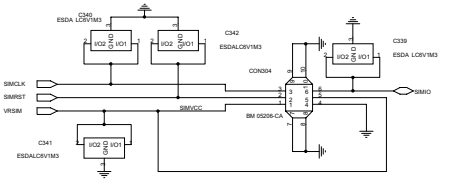

SIM INTERFACE

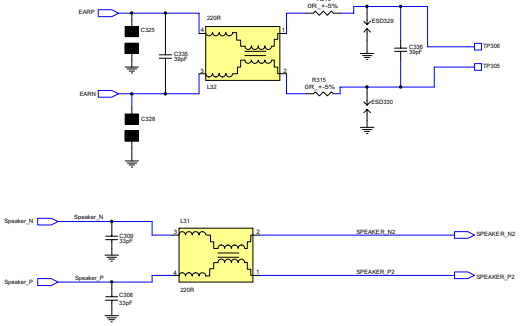

AUDIO INTERFACE

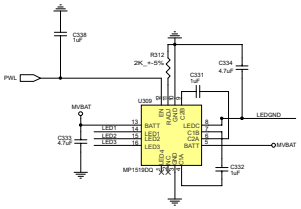

LED BACKLIGHT DRIVER IC

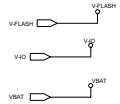

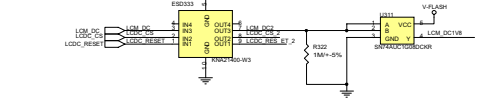

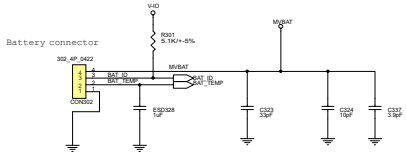

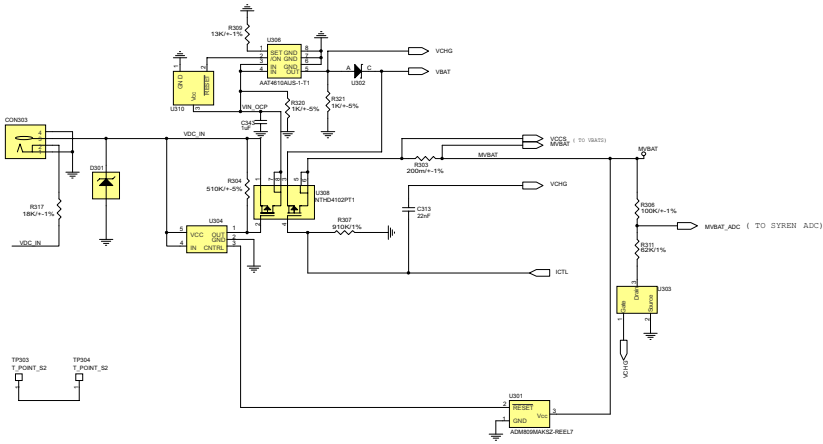

CMCS
Chi Mei Communication Systems, Inc.

Title: 3 IO

Size: A1 | Document Number: DLT | Rev: 0.2

Date: [illegible] 10, 2005 | Sheet: 48 of

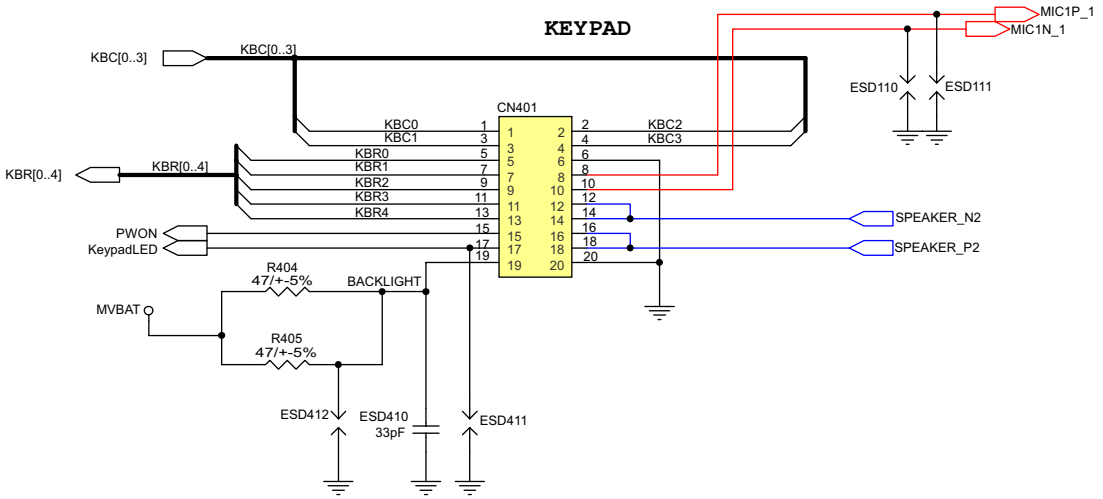

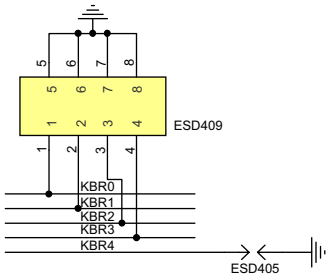

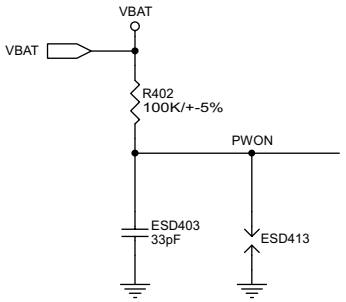

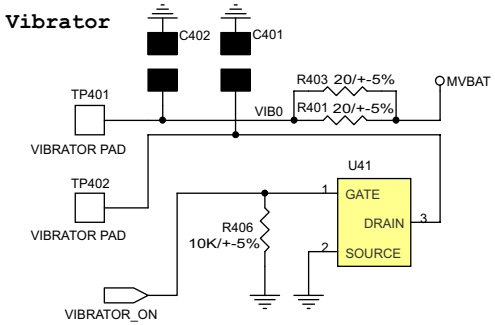

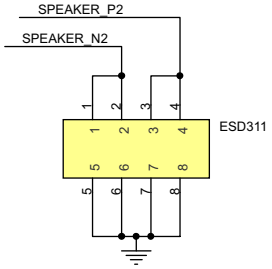

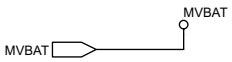

CMCS

Chi Mei Communication Systems, Inc.

Title: 4 Keypad		
Size: B	Document Number: TCLT	Rev: 0.2
Date: 星期三，八月 10, 2005	Sheet 58 of	

Flash = CS0 ; SRAM = CS3

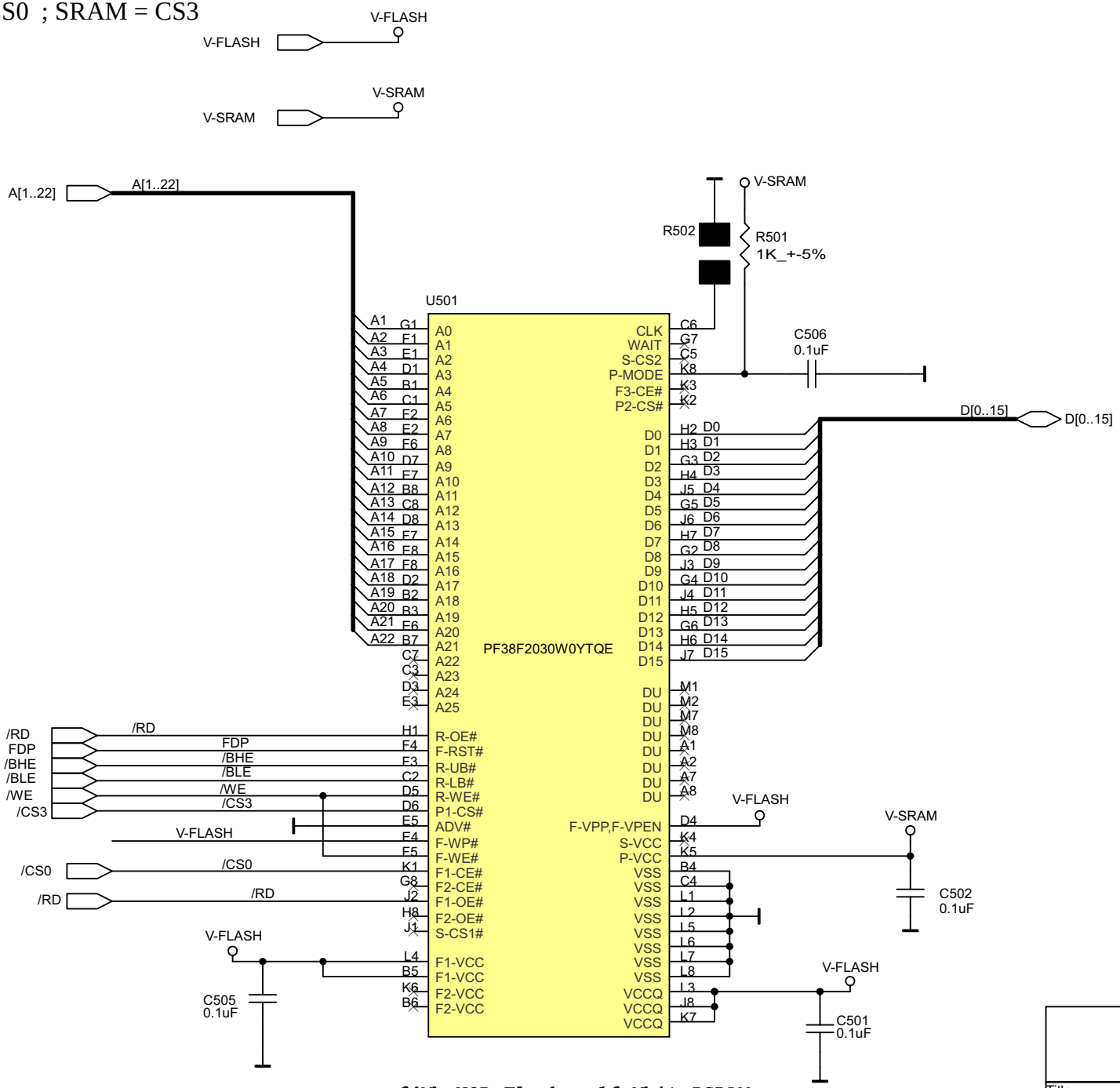

64Mb NOR Flash + 16 Mbit PSRAM

VIO = VCC = 1.8V

CMCS		
Chi Mei Communication Systems, Inc.		
Title: 5 Memory		
Size: A4	Document Number: TCLT	R ev: 0.2
Date: 星期三, 八月 10, 2005	Sheet 68 of	

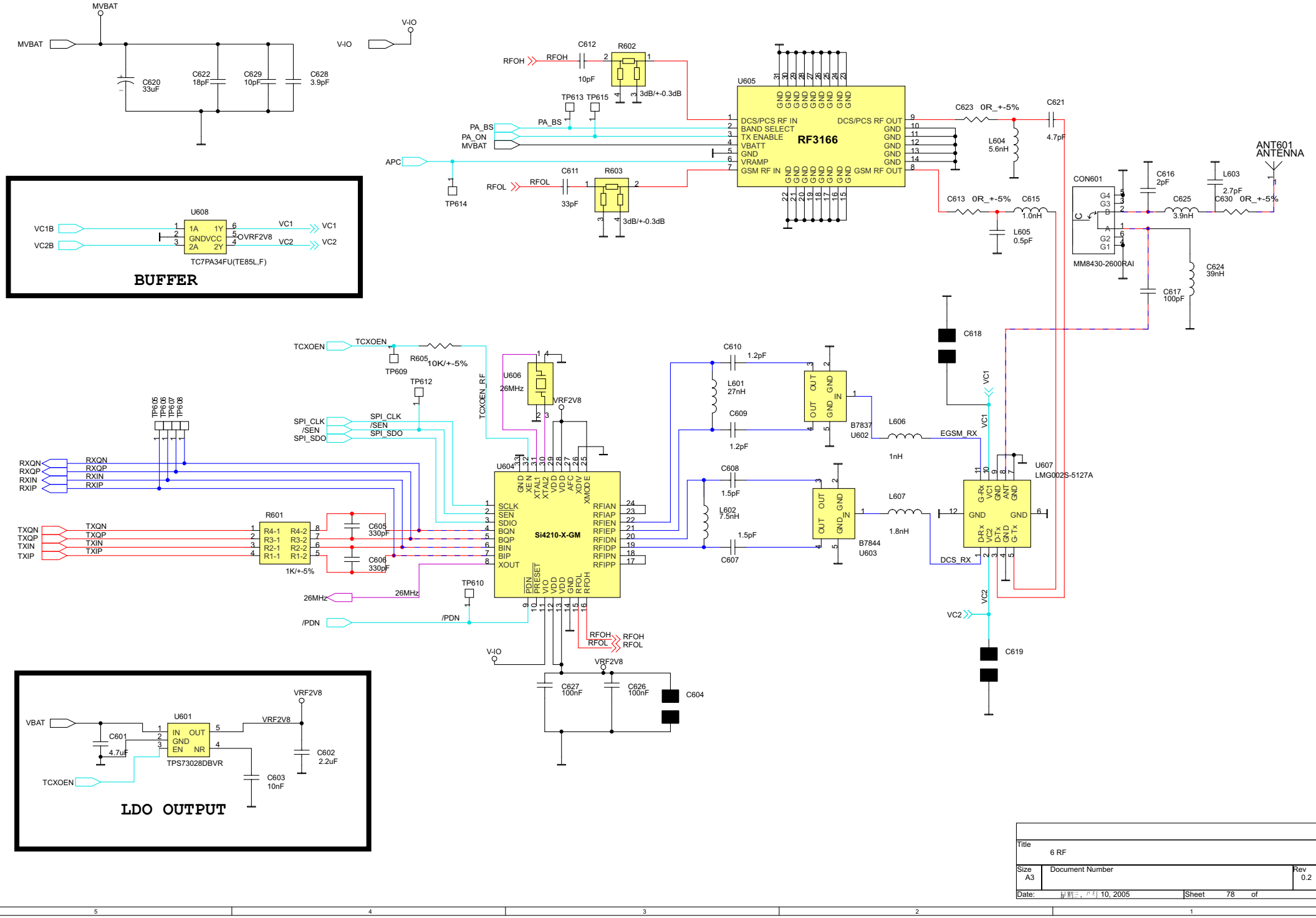

Title	6 RF
Size	A3
Document Number	
Rev	0.2
Date:	星期三, 八月 10, 2005
Sheet	78 of

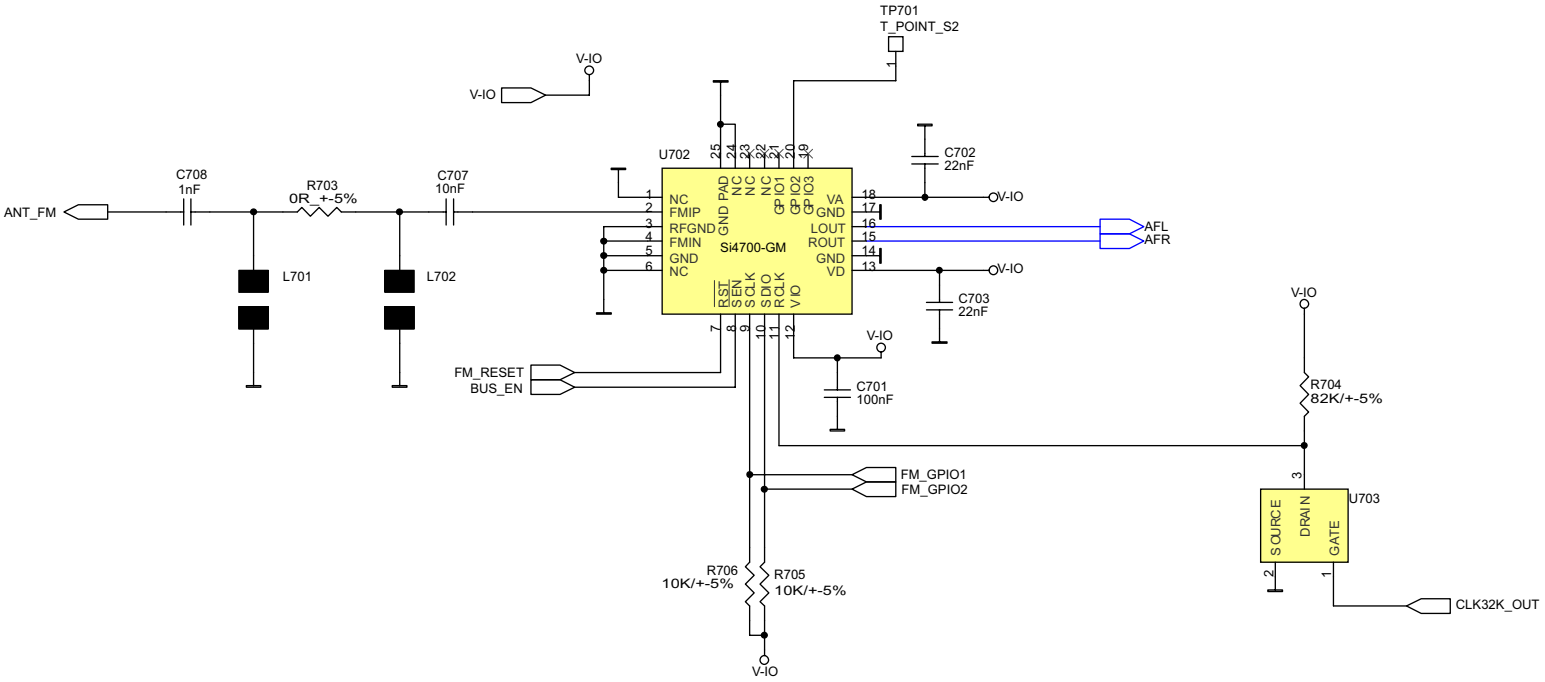

Title	<Title>	
Size B	Document Number <Doc>	Rev 0.2
Date: 星期三，八月 10, 2005	Sheet 88 of	

KEYPAD Board Schematic

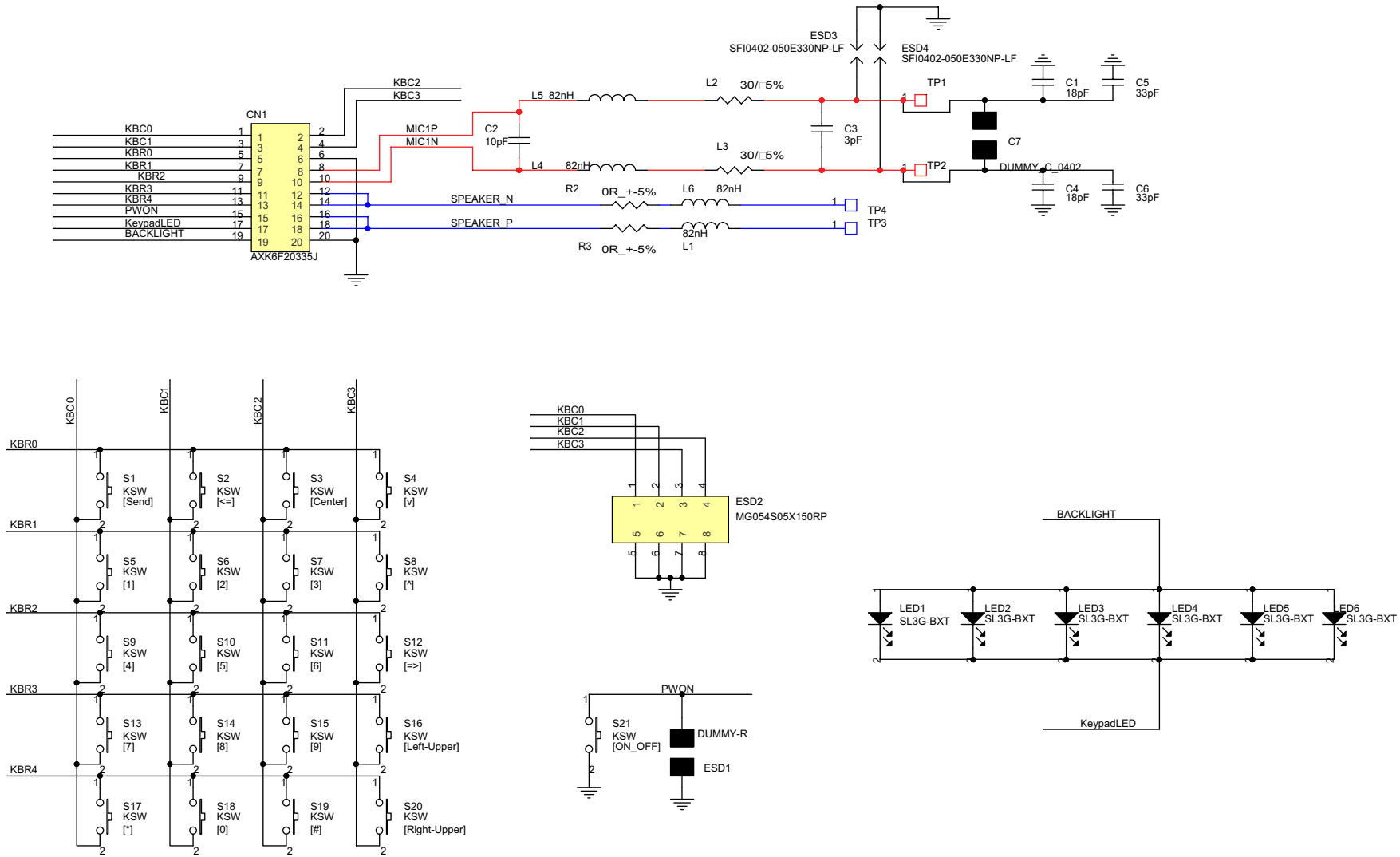

Title	TCLT Keypad	
Size B	Document Number <Doc>	Rev
Date: 星期二, 十月 25, 2005	Sheet 11 of	