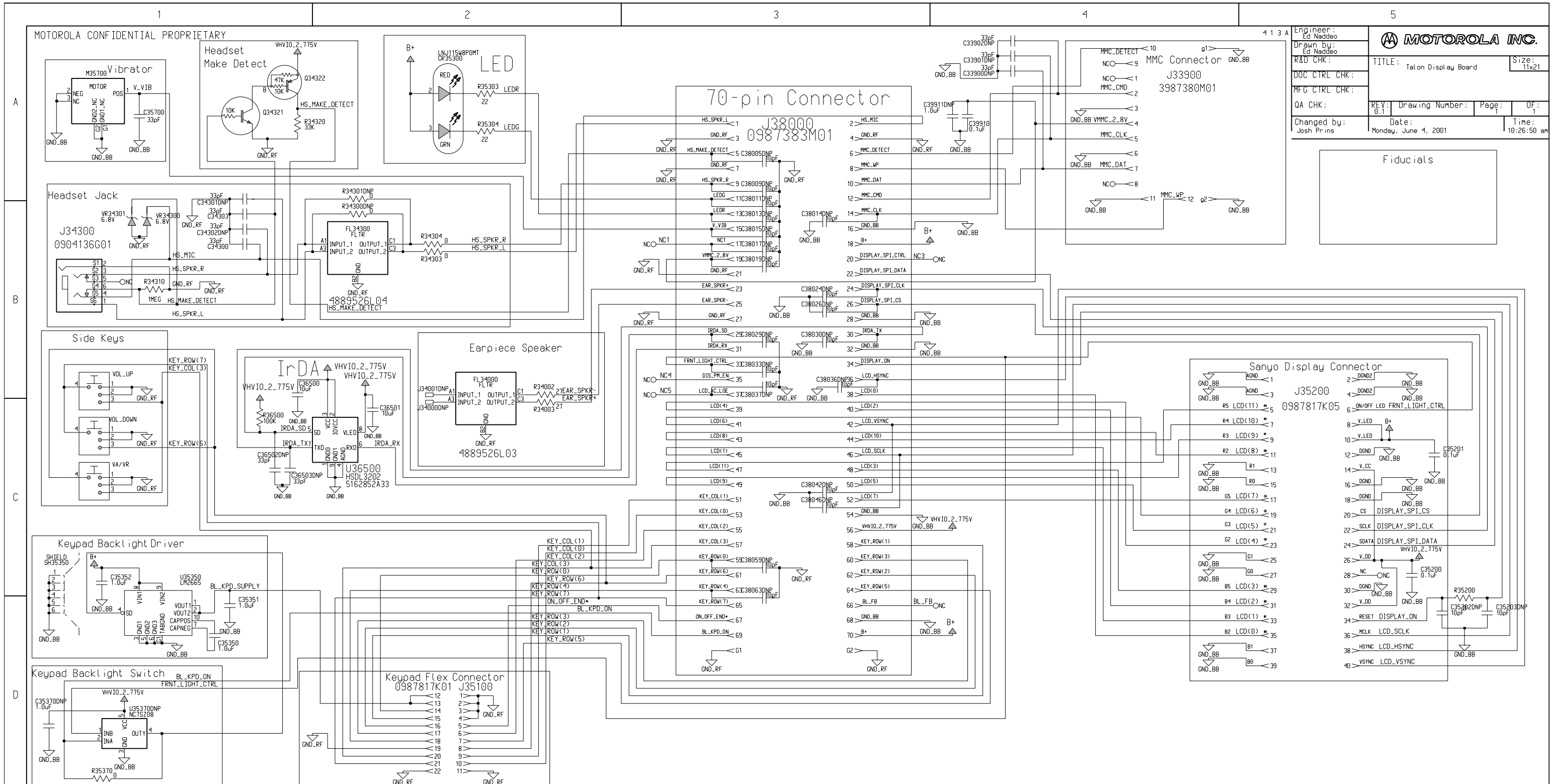
MOTOROLA CONFIDENTIAL PROPRIETARY
Vibrator
M35700
Headset Make Detect
Q34322
Q34321
LED
LNJ115W8P0MT
CR35300
Headset Jack
J34300
0904136G01
FL34300
FLTR
4889526L04
70-pin Connector
J38000
0987383M01
MMC Connector
J33900
3987380M01
Fiducials
Side Keys
IrDA
U36500
HSDL3202
5162852A33
Earpiece Speaker
FL34000
FLTR
4889526L03
Sanyo Display Connector
J35200
0987817K05
Keypad Backlight Driver
U35350
LM2665
Keypad Backlight Switch
U35370DNP
NC7SZ08
Keypad Flex Connector
0987817K01 J35100
Engineer: Ed Naddeo
Drawn by: Ed Naddeo
R&D CHK:
DOC CTRL CHK:
MFG CTRL CHK:
QA CHK:
Changed by: Josh Prins
MOTOROLA INC.
TITLE: Talon Display Board
Size: 11x21
REV: 0.1
Drawing Number:
Page: 1
OF: 1
Date: Monday, June 4, 2001
Time: 10:26:50 am