A830: Layout Side 1(Issue O Build)

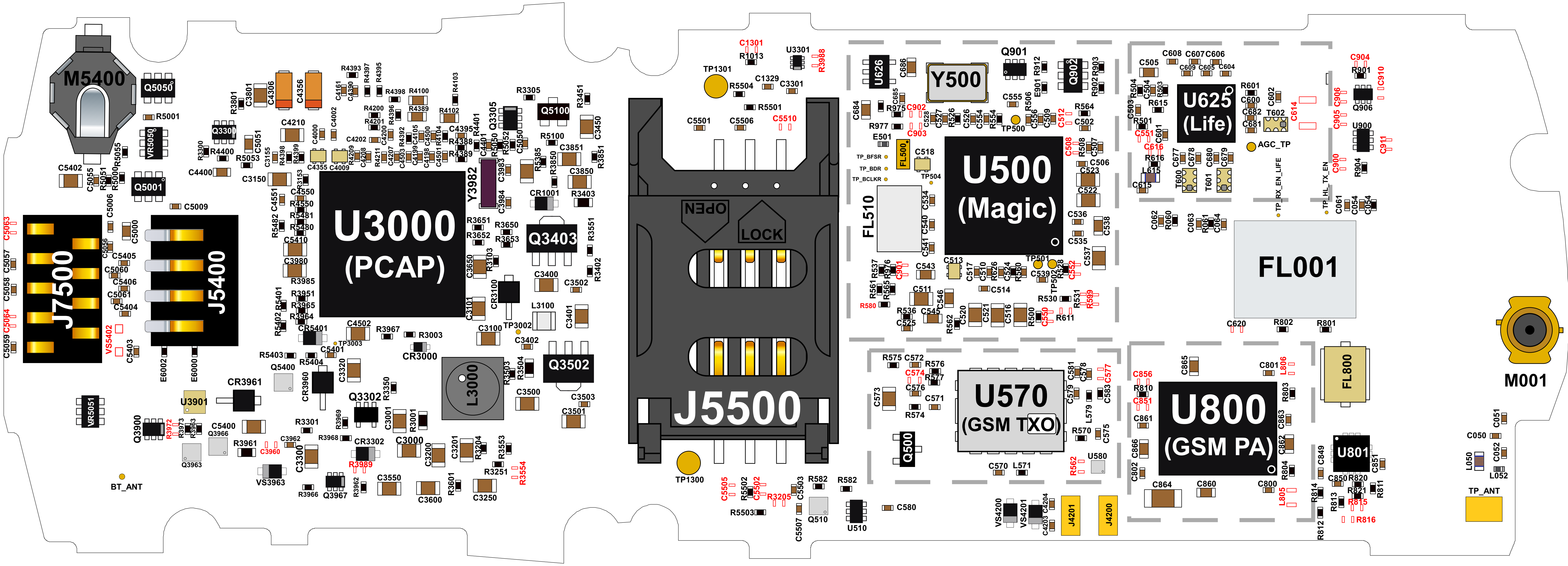

Board: 8488180M12

A830: Layout Side 2(Issue O Build)

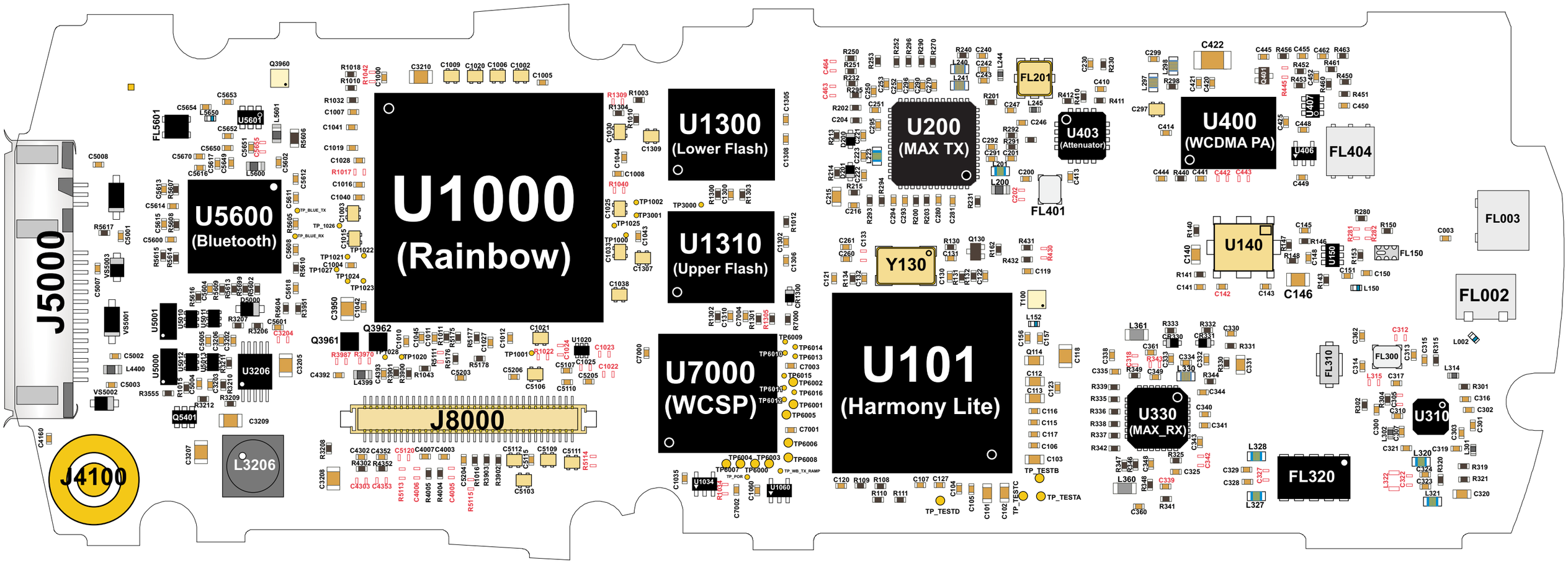

Board: 8488180M12

A830: Keyboard Layout 1(P8F Build)

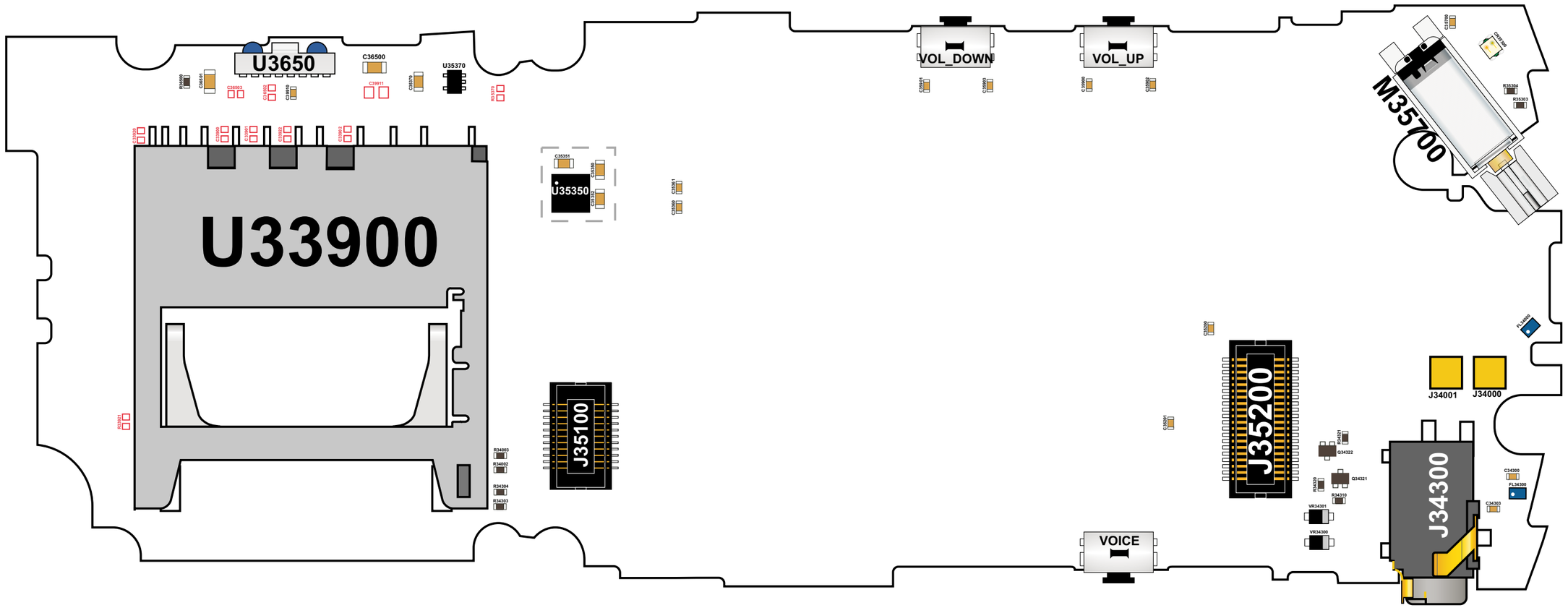

Board: 8488884L09

A820: Keyboard Layout 2(P8F Build)

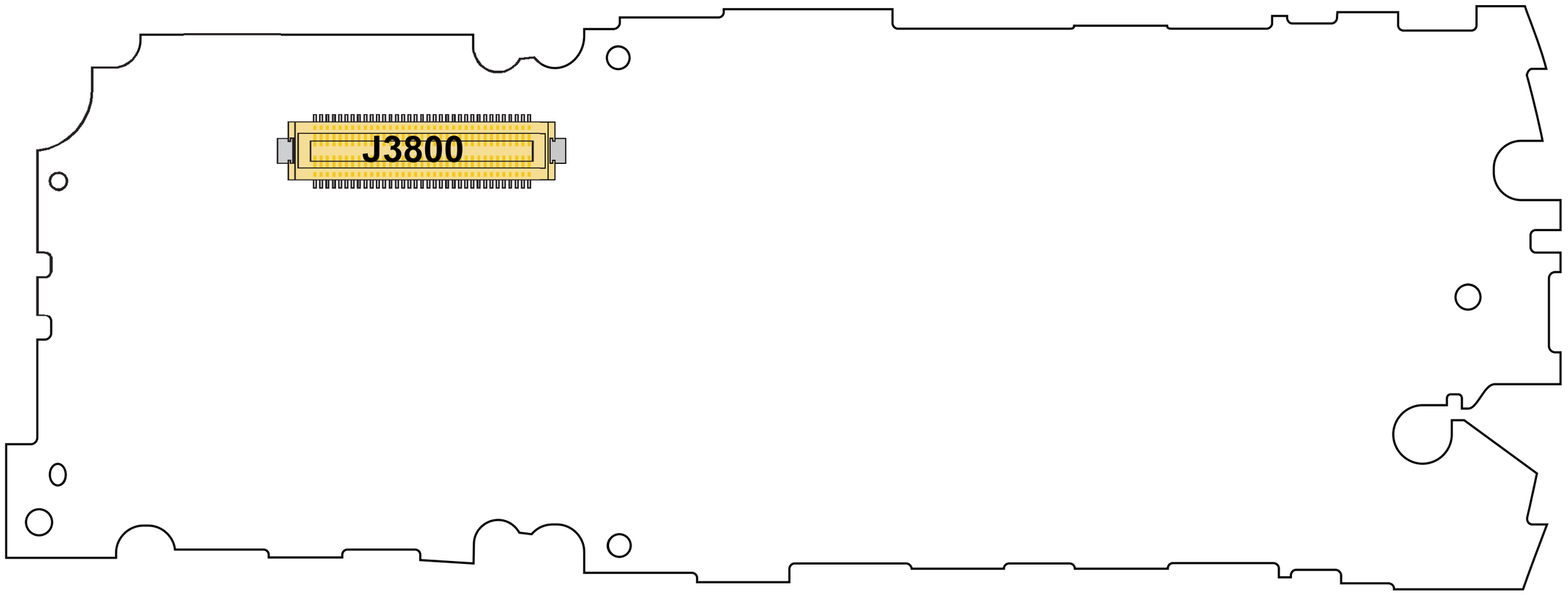

Board: 8488884L09