A830 BaseBand Block Diagram

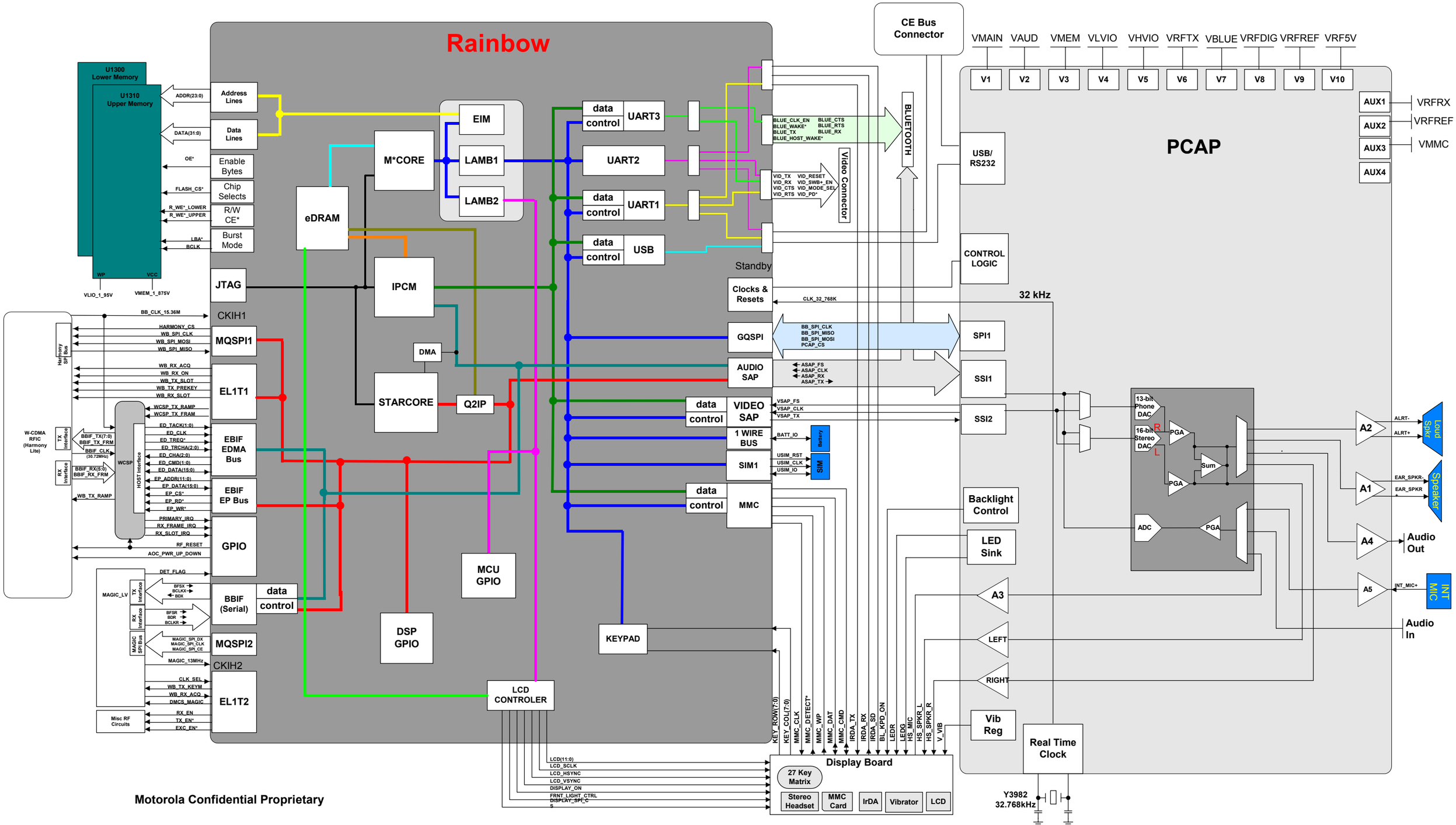

Motorola Confidential Proprietary