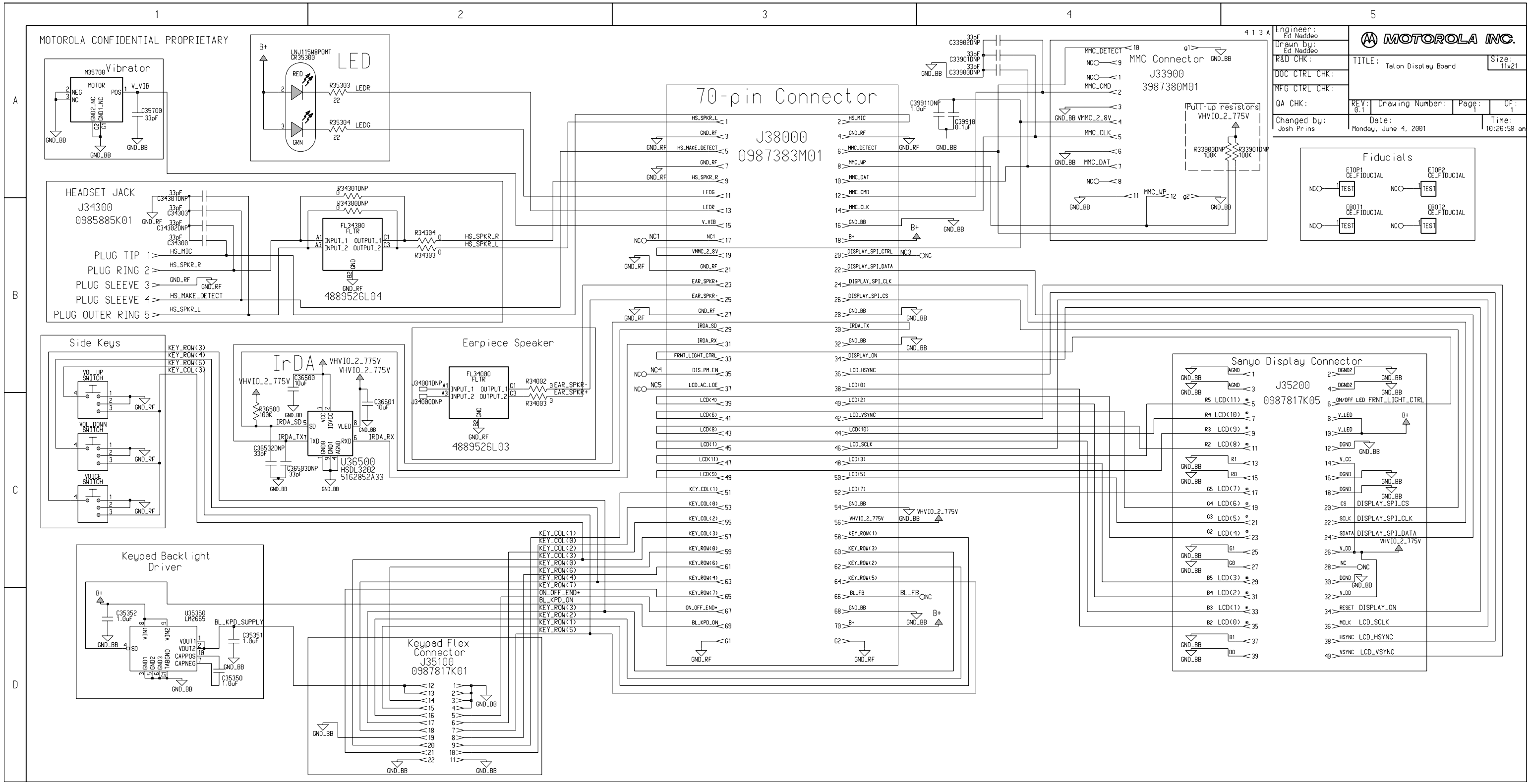
MOTOROLA CONFIDENTIAL PROPRIETARY
Vibrator
M35700
MOTOR
NEG
NC
POS
V_VIB
C35700
33pF
GND_BB
LED
B+
LNJ115W8P0MT
CR35300
RED
GRN
R35303
22
LEDR
R35304
22
LEDG
70-pin Connector
J38000
0987383M01
HS_SPKR_L
GND_RF
HS_MAKE_DETECT
HS_SPKR_R
LEDG
LEDR
V_VIB
NC1
VMMC_2_8V
EAR_SPKR+
EAR_SPKR-
IRDA_SD
IRDA_RX
FRNT_LIGHT_CTRL
DIS_PM_EN
LCD_AC_LOE
LCD(4)
LCD(6)
LCD(8)
LCD(1)
LCD(11)
LCD(9)
KEY_COL(1)
KEY_COL(0)
KEY_COL(2)
KEY_COL(3)
KEY_ROW(0)
KEY_ROW(6)
KEY_ROW(4)
KEY_ROW(7)
ON_OFF_END*
BL_KPD_ON
G1
HS_MIC
MMC_DETECT
MMC_WP
MMC_DAT
MMC_CMD
MMC_CLK
DISPLAY_SPI_CTRL
DISPLAY_SPI_DATA
DISPLAY_SPI_CLK
DISPLAY_SPI_CS
IRDA_TX
DISPLAY_ON
LCD_HSYNC
LCD(0)
LCD(2)
LCD_VSYNC
LCD(10)
LCD_SCLK
LCD(3)
LCD(5)
LCD(7)
VHVIO_2_775V
KEY_ROW(1)
KEY_ROW(3)
KEY_ROW(2)
KEY_ROW(5)
BL_FB
G2
C33902DNP
C33901DNP
C33900DNP
C39911DNP
1.0uF
C39910
0.1uF
MMC Connector
J33900
3987380M01
MMC_DETECT
MMC_CMD
VMMC_2_8V
MMC_CLK
MMC_DAT
MMC_WP
Pull-up resistors
VHVIO_2_775V
R33900DNP
100K
R33901DNP
100K
HEADSET JACK
J34300
0985885K01
PLUG TIP 1
PLUG RING 2
PLUG SLEEVE 3
PLUG SLEEVE 4
PLUG OUTER RING 5
HS_MIC
HS_SPKR_R
HS_MAKE_DETECT
HS_SPKR_L
C34300
C34301DNP
C34302DNP
C34303
R34301DNP
R34300DNP
FL34300
FLTR
INPUT_1
INPUT_2
OUTPUT_1
OUTPUT_2
4889526L04
R34304
R34303
Fiducials
FIOP1
CE_FIDUCIAL
FIOP2
CE_FIDUCIAL
FBOI1
CE_FIDUCIAL
FBOI2
CE_FIDUCIAL
TEST
Side Keys
KEY_ROW(3)
KEY_ROW(4)
KEY_ROW(5)
KEY_COL(3)
VOL_UP
SWITCH
VOL_DOWN
SWITCH
VOICE
SWITCH
IrDA
VHVIO_2_775V
C36500
10uF
C36501
10uF
R36500
100K
IRDA_SD
IRDA_TX
IRDA_RX
C36502DNP
33pF
C36503DNP
33pF
U36500
HSDL3202
5162852A33
Earpiece Speaker
J34001DNP
J34000DNP
FL34000
FLTR
R34002
R34003
EAR_SPKR-
EAR_SPKR+
4889526L03
Sanyo Display Connector
J35200
0987817K05
AGND
DGND2
ON/OFF LED
FRNT_LIGHT_CTRL
V_LED
DGND
V_CC
DGND
CS
SCLK
SDATA
V_DD
NC
RESET
MCLK
HSYNC
VSYNC
DISPLAY_SPI_CS
DISPLAY_SPI_CLK
DISPLAY_SPI_DATA
DISPLAY_ON
LCD_SCLK
LCD_HSYNC
LCD_VSYNC
Keypad Backlight
Driver
C35352
1.0uF
U35350
LM2665
VIN1
VIN2
VOUT1
VOUT2
CAPPOS
CAPNEG
SD
GND1
GND2
GND3
FABGND
BL_KPD_SUPPLY
C35351
1.0uF
C35350
1.0uF
Keypad Flex
Connector
J35100
0987817K01
MOTOROLA INC.
Engineer: Ed Naddeo
Drawn by: Ed Naddeo
R&D CHK:
DOC CTRL CHK:
MFG CTRL CHK:
QA CHK:
Changed by: Josh Prins
TITLE: Talon Display Board
Size: 11x21
REV: 0.1
Drawing Number:
Page: 1
OF: 1
Date: Monday, June 4, 2001
Time: 10:26:50 am